Series 8000DH CO_2 Incubator

Direct Heat with Sterilization Cycle

Operating and Maintenance Manual 7013540 Rev. 10

Visit us online to register your warranty
www.thermoscientific.com/labwarranty

Thermo SCIENTIFIC

Model	Sensor*	Voltage**
3540	T/C	115
3541	T/C	230
3542	IR	115
3543	IR	230

*T/C is a thermal conductivity sensor.
IR is an infra-red sensor.
**All units are 50/60 Hz.

MANUAL NUMBER 7013540

REV	ECR/ECN	DATE	DESCRIPTION	By
10	ECNM-002407	02/23/23	Updated drawing in page 8-5, 8-6, 8-10, 8-11 and 8-12.	TFI
9	ECNM-002047	07/15/22	Updated the Shelf count in page 7-2.	TFI
8	ECNM-001383	03/03/21	Updated Assembly and Electrical Schematic drawings with new part number in pages 8-11 and 9-1 to 9-6.	TFI
7	ECNM-001141	09/29/2020	Added tubing inspection details to preventive maintenance section in page 4-3.	TFI
6	40087/IN-4743	7/27/16	Changed label in remote alarm artwork to note - pg 6-1	ccs
5	40639	5/25/16	Added risk assessment information	ccs
4	31343/IN-4592	10/22/14	New magnetic door switch (parts list, expl dwg, elec schematics) RoHS	ccs
3	29174/IN-4469	3/5/14	Updated solenoid - pgs 8-5 & 9-1 through 9-3	ccs
2	30384/IN-4435	1/7/14	Added SRO ext door part number 1900567 to parts list	ccs
1	24851, 24849/IN-3971	1/7/10	CO2 valve connection inlet & inner door switch kits-parts list & drawing 370-200-5	ccs
0	25694/IN-3954	10/26/09	Release level 2 - added spring rod kit (pg. 1-7)	ccs

Important Read this instruction manual. Failure to read, understand and follow the instructions in this manual may result in damage to the unit, injury to operating personnel, and poor equipment performance. ▲

Caution All internal adjustments and maintenance must be performed by qualified service personnel. ▲

- Use this product only in the way described in the product literature and in this manual. Before using it, verify that this product is suitable for the intended use.
- Do not modify system components, especially the controller. Use OEM exact replacement equipment or parts. Before use, confirm that the product has not been altered in any way.
- Disconnect the unit from all power sources before cleaning, troubleshooting, or performing other maintenance on the product or its controls. To disconnect power supply to the incubator, unplug the supply cord at the back of the incubator. Note that turning the key switch on the front control panel to the Off position is not sufficient to disconnect power.

Warning The user is responsible for carrying out appropriate decontamination procedures when hazardous materials are spilled on or inside the incubator. ▲

Material in this manual is for information purposes only. The contents and the product it describes are subject to change without notice. Thermo Fisher Scientific makes no representations or warranties with respect to this manual. In no event shall Thermo be held liable for any damages, direct or incidental, arising out of or related to the use of this manual.

Warning If the incubator is not used in the manner specified in this operating manual, the protection provided by the equipment design may be impaired. ▲

© 2023 Thermo Scientific. All rights reserved.

Important operating and/or maintenance instructions. Read the accompanying text carefully.

Potential electrical hazards. Only qualified persons should perform procedures associated with this symbol.

Equipment being maintained or serviced must be turned off and locked off to prevent possible injury.

Asphyxiation Hazard Warning. High concentrations of CO_2 and N_2 can displace oxygen and cause asphyxiation!

Lifting Hazard Warning. The incubator weighs more than 200lbs (91 kgs). Take adequate safety measures when moving this device.

WEEE Compliance: Thermo Fisher Scientific has contracted with companies for recycling/disposal in each EU Member State. For further information, send an email to weee.recycle@thermofisher.com.

- ✔ Always use the proper protective equipment (clothing, gloves, goggles, etc.).
- ✔ Always dissipate extreme cold or heat and wear protective clothing.
- ✔ Always follow good hygiene practices.
- ✔ Each individual is responsible for his or her own safety.

Do You Need Information or Assistance on Thermo Scientific Products?

If you do, please contact us 8:00 a.m. to 6:00 p.m. (Eastern Time) at:

1-740-373-4763	Direct
1-800-438-4851	Toll Free, U.S. and Canada
1-877-213-8051	FAX
http://www.thermofisher.com	Internet Worldwide Web Home Page
service.led.marietta@thermofisher.com	Tech Support Email Address
www.unitylabservices.com	Certified Service Web Page

Our **Sales Support** staff can provide information on pricing and give you quotations. We can take your order and provide delivery information on major equipment items or make arrangements to have your local sales representative contact you. Our products are listed on the Internet and we can be contacted through our Internet home page.

Our **Service Support** staff can supply technical information about proper setup, operation or troubleshooting of your equipment. We can fill your needs for spare or replacement parts or provide you with on-site service. We can also provide you with a quotation on our Extended Warranty for your Thermo Scientific products.

Whatever Thermo Scientific products you need or use, we will be happy to discuss your applications. If you are experiencing technical problems, working together, we will help you locate the problem and, chances are, correct it yourself...over the telephone without a service call.

When more extensive service is necessary, we will assist you with direct factory trained technicians or a qualified service organization for on-the-spot repair. If your service need is covered by the warranty, we will arrange for the unit to be repaired at our expense and to your satisfaction.

Regardless of your needs, our professional telephone technicians are available to assist you Monday through Friday from 8:00 a.m. to 6:00 p.m. Eastern Time. Please contact us by telephone or fax. If you wish to write, our mailing address is:

Thermo Fisher Scientific (Asheville) LLC
401 Millcreek Road, Box 649
Marietta, OH 45750

International customers, please contact your local Thermo Scientific distributor.

Warranty Notes

Information You Should Know Before Requesting Warranty Service

- **Locate the model and serial numbers.** A serial tag is located on the unit itself.
- For equipment service or maintenance, or with technical or special application inquiries, contact your local distributor.

Repairs NOT Covered Under Warranty

- **Calibration of control parameters.** Nominal calibrations are performed at the factory; typically ±1°C for temperature, ±1% for gases, and ±5% for humidity. Our service personnel can provide precise calibrations as a billable service at your location. Calibration after a warranty repair is covered under the warranty.
- **Damage resulting from use of improper quality water, chemicals or cleaning agents detrimental to equipment materials.**
- **Service calls for improper installation or operating instructions.** Corrections to any of the following are billable services:
  1) electrical service connection
  2) tubing connections
  3) gas regulators
  4) gas tanks
  5) unit leveling
  6) room ventilation
  7) adverse ambient temperature fluctuations
  8) any repair external to the unit
- **Damage resulting from accident, alteration, misuse, abuse, fire, flood, acts of God, or improper installation.**
- **Repairs to parts or systems resulting from unauthorized unit modifications.**
- **Any labor costs other than that specified during the parts and labor warranty period, which may include additional warranty on CO_2 sensors, blower motors, water jackets, etc.**

Table of Contents

Section 1 Installation and Start-Up 1-1

Keypad Operation 1-3
Displays 1-4
Installing the Incubator 1-4
Stacking the Incubators 1-5
Preliminary Cleaning 1-6
Duct Sheets and Shelf Installation 1-7
Access Port Filter & CO_2 Sensor Cover Plate 1-9
Air Sample Filter Installation 1-9
HEPA Filter Installation 1-10
Leveling the Unit 1-10
Electrical Power Connection 1-10
Filling the Humidity Pan 1-11
Connecting the CO_2 Gas Supply 1-12
Incubator Start-Up 1-13

Section 2 Calibration 2-1

Temperature 2-1
Thermal Conductivity CO_2 System 2-2
Infrared CO_2 System 2-3
Relative Humidity 2-4

Section 3 **Configuration** **3-1**
Turn Audible Alarm ON/OFF 3-1
New HEPA Filter 3-1
Set REPLACE HEPA filter reminder 3-2
Set Access Code 3-2
Set Low Temp Alarm Limit (tracking alarm) 3-3
Enable Low Temp Alarm to Trip Contacts 3-3
Set Low CO_2 Alarm Limit (tracking alarm) 3-4
Set High CO_2 Alarm Limit (tracking alarm) 3-4
Enable CO_2 Alarms to Trip Contacts 3-5
Set New Zero Number for T/C CO_2 Sensors 3-5
Setting a Low RH Alarm Limit 3-6
Set New Span Number for T/C CO2 Sensors 3-6
Enabling Temp/RH to be Displayed 3-7
Enable RH Alarms to Trip Contacts 3-7
Enabling Temp/RH to be Displayed 3-8

Section 4 **Alarms** **4-1**
Temp Controller Failure TMP CNTR ERR 4-2
Sensor Fault Alarms 4-2

Preventive Maintenance **4-3**

Section 5 **Routine Maintenance** **5-1**
Clean Cabinet Interior 5-2
Clean Cabinet Exterior 5-2
Clean Glass Doors 5-3
Clean Humidity Pan 5-3
HEPA Filter Maintenance 5-3
Replace Power Fuses 5-3
Replace Air Sample Filter 5-4
Electronics Section 5-4
Sterilization Cycle **5-6**

Section 6 **Factory Options 6-1**
Remote Alarms 6-1
Humidity Readout 6-2

Section 7 **Specifications 7-1**

Section 8 **Spare Parts 8-1**
Exploded Part Drawings 8-2

Section 9 **Electrical Schematics 9-1**

Section 10 **Warranty Information 10-1**

Section 1 Installation and Start-Up

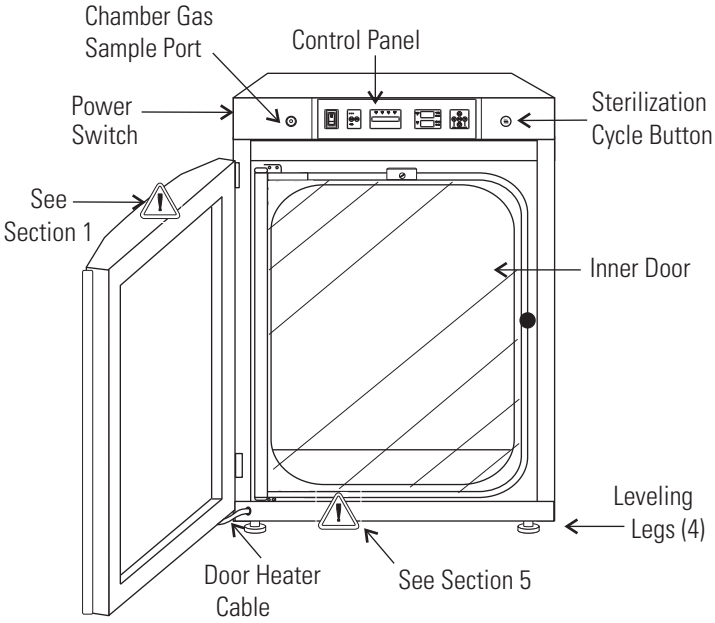

Figure 1-1. Components

- Chamber Gas Sample Port - Used for sampling chamber CO_2 content using a FYRITE or similar instrument.
- Main Power Switch - Mains Disconnect
- Control Panel - Keypad, displays & indicators (Figure 1-2)
- Leveling Legs - Used to level the unit
- Sterilization Cycle Button - Switch to initiate sterilization cycle

Note The incubators are stackable. Information follows. ▲

- Silences the audible alarm. See Section 4 for alarm ringback times.

Alarm Indicator - Light pulses on/off during an alarm condition.

MODE Select Switch - Used to select Run, Setpoints, Calibration and Configuration modes.

Mode Select Indicators -

RUN: Run Menu

SET: Set Points Menu

CAL: Calibration Menu

CON: Configuration Menu

Message Display - Shows system status.

HEAT Indicator - Lights when heaters are activated.

INJ Indicator - Lights during CO_2 injection into chamber.

T (°C) Display - Programmable to display temperature. See Configuration section.

RH (%) Display - Shows percentage of humidity. See Configuration section.

CO_2 (%) Display - Programmable to display CO_2 percentage. See Configuration section.

SCROLL FOR PARAMETERS Arrows: Steps the operator through parameters of SET, CAL and CON modes. The right arrow goes to the next parameter, the left arrow returns to the previous parameter. Up and down arrows increase/decrease or toggles the parameter value selected in SET, CAL and CON modes.

ENTER - Stores the changed value into unit memory.

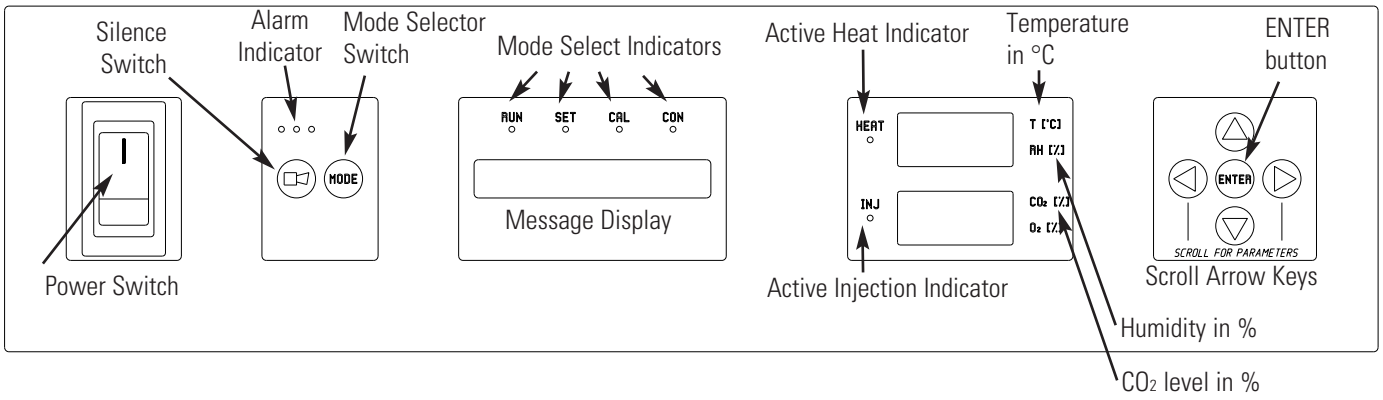

Figure 1-2. Control Panel

Keypad Operation

The Series 8000DH incubator has four basic modes for incubator setup: Run, Setpoints, Calibration and Configuration.

- Run is the default mode for normal operation.
- Set is used to enter system setpoints for incubator operation.
- Calibration is used to calibrate various system parameters.
- Configuration allows for custom setup of various options.

Table 1-1. Selections Under Each Mode

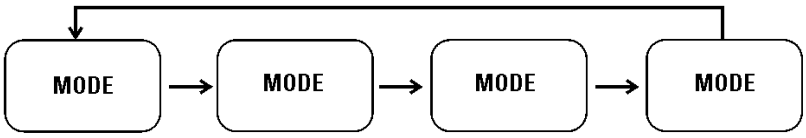

RUN	SETPOINT	CALIBRATION	CONFIGURATION
Default Mode	**Temperature**	**Temp Offset**	**Audible**
	Overtemp	**CO_2 Cal**[1]	**New HEPA Timer**
	CO_2	**IR Cal**[2]	**Replace HEPA Reminder**
		RH Cal	**Access Code**
			Temp Lo Alarm
			Temp Relay
			CO_2 Lo Alarm
			CO_2 Hi Alarm
			CO_2 Relay
			CO_2 Z & S #'s *
			RH Lo Alarm
			RH Relay
			Display Temp
			Display RH

[1] T/C units
[2] IR units
*T/C units only

Base Unit Displays
Option Unit Displays

Displays

Message Display: Shows system status (Mode) at all times. Shows 'CLASS 100' or 'SYSTEM OK' during normal operation, or alarm messages if the system detects an alarm condition (see Section 4, Alarms).
The message 'CLASS 100' is a timing mechanism indicating that, under normal operating conditions with the HEPA filter installed, the air inside the chamber meets the Class 100 air cleanliness standard for particulates of 0.5 micron size or larger per cubic foot of air. Further information on the Class 100 classification of air quality is available from Thermo.

Upper and Lower Displays: The 7 segment upper display shows temp and RH. The lower display shows CO_2 and O_2.

Installing the Incubator

1. Maintain a minimum six inch clearance behind the unit for electrical and gas hook-up. In addition, a minimum three inch ventilation clearance is needed on each side.

2. Locate the unit on a firm level surface capable of supporting the unit weight of 260 lbs (118 kg) plus the estimated total sample and user equipment weight.

3. Locate the incubator away from exterior doors and windows as changes in outdoor temperatures and contact with direct sunlight can affect the anti-condensation functions of the unit.

4. Position the door opening away from forced air heating and cooling ducts as these can carry dust, dirt and other contaminants into the incubator chamber, as well as negatively affect the door opening recovery time.

5. Lift the unit by the sides of the cabinet base. Do not attempt to lift it by the front and back. This places stress on the outer door hinges.

Stacking the Incubators

Warning Install stacked units against a wall or similar structure. ▲

Warning With incubators in a stacked configuration, do not leave both exterior doors open at the same time. ▲

Warning If the units have been in operation, turn them both off and disconnect the power source before beginning any service work. ▲

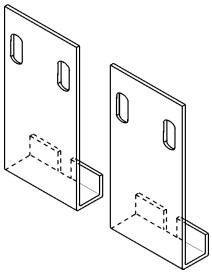

Two stacking brackets (shown at left) are included in the parts bag shipped with each incubator.

Figure 1-3. Stacking Brackets

1. Remove the cover plate securing the door cord from the incubator to be on top. See Figure 1-4. Disconnect the plug from the connector.

2. Remove the four screws securing the door hinges to the unit. Remove the door and set it aside.

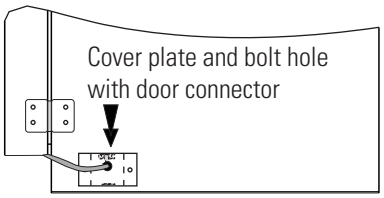

Figure 1-4. Cover Plate

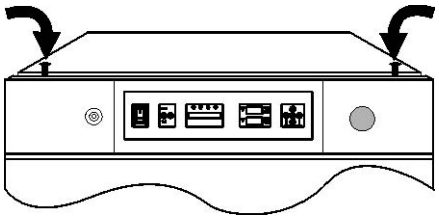

Figure 1-5. Hole Plug Locations

3. Unscrew the two hole plugs from the top cover of the incubator to be the bottom of the stack (Figure 1-5).

4. Unscrew and remove the 4 leveling feet from the unit to be stacked on top and lift it onto the bottom unit. Align all sides.

Warning This incubator weighs 260 lbs (118 kg). Have sufficient personnel available when lifting. Lift the unit by the sides of the cabinet base to avoid placing stress on the outer door hinge. ▲

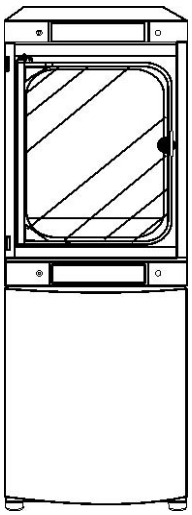

Figure 1-6. Stacked

Stacking the Incubators (cont.)

5. Insert the stacking brackets into the slots at the back of the stacked units as shown in Figure 1-7.
6. Align the slotted holes in the brackets with the mounting holes on the back of the top incubator. Secure the brackets with the screws and washers provided in the parts bag. See Figure 1-8.

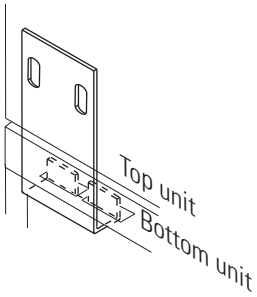

Figure 1-7. Bracket into Slot

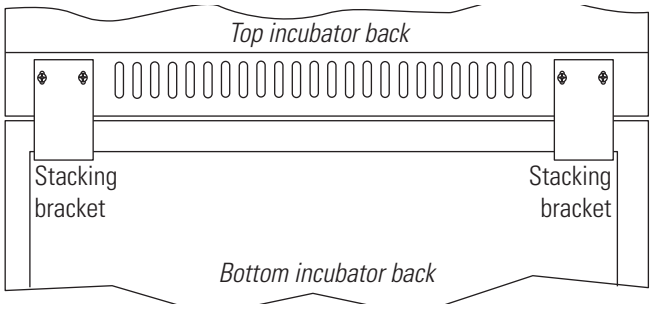

Figure 1-8. Installed Brackets on Back of Unit

7. Thread one 1/4 x 20 bolt and washer included with the stacking brackets, into the hole behind the cover plate. Do not tighten. Refer to Figure 1-9.

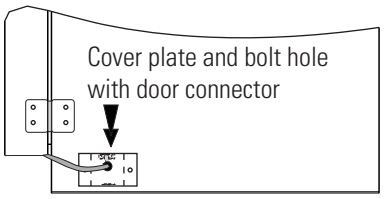

Figure 1-9. Bolt Hole

8. Remove the cover plate from the same area on the other side of the top unit.
9. Thread the other 1/4 x 20 bolt and washer into this hole.
10. Tighten the bolts on both sides.
11. Assemble the door hinges to the unit. Secure with the screws.
12. Plug the door cord into the connector, as previously. Secure the cover plate.
13. Install the cover plate on the other side of the unit. The stacked incubators are ready for service.

Preliminary Cleaning

1. Remove vinyl from shelf channels, duct sheets, and air duct, if present.
2. Use a suitable laboratory disinfectant, such as quaternary ammonium, to clean all interior surfaces.

Caution Before using any cleaning or decontamination method except those recommended by the manufacturer, users should check with the manufacturer that the proposed method will not damage the equipment. Accidental spills of hazardous materials on or inside this unit are the responsibility of the user. ▲

Duct Sheet and Shelf Installation

1. Installed included grommets into the back flange of each duct sheet; 6 grommets per sheet. See Figure 1-10.

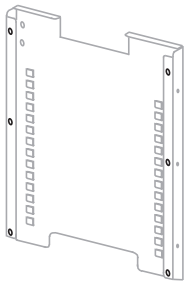

Figure 1-10. Grommets on back of duct sheet

2. Install the side ducts with the tabs facing into the center of the chamber with their slots up. There are no right side or left side ducts, simply rotate one of them to fit the opposite side. Tilt the side ducts as they are placed into the chamber so the tops fit into the top air duct, then guide them into the vertical position. Figure 1-11 shows the side duct as it would be oriented for the right side of the chamber.

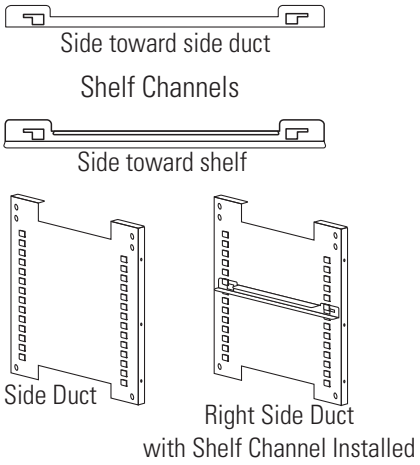

Figure 1-11. Shelf Channels & Side Ducts

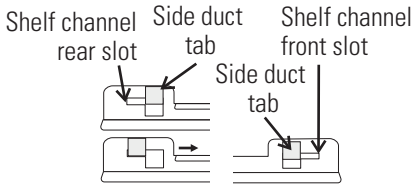

Figure 1-12. Channels and Slots

3. Referring to Figure 1-11, note that there is no difference in the left and right shelf channels.

4. Install the shelf channels by placing the channel's rear slot over the appropriate rear tab on the side duct. Pull the shelf channel forward and engage the channel's front slot into the side duct's appropriate forward tab. Refer to Figure 1-12.

5. Figure 1-11 shows one of the channels installed on the right side duct.

Installing Duct Sheets and Shelves (cont.)

6. Locate the supplied rod, spring and end pieces; 4 each. Assemble the spring to the rod by positioning the very end of the spring over the ridge at the rod. Then press the spring to the opposite side. It should snap into place. See Figures 1-13 and 1-14.

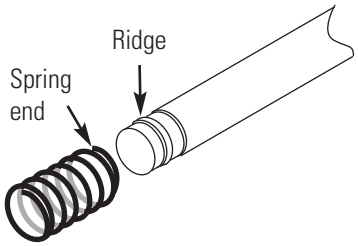

Figure 1-13. Spring End

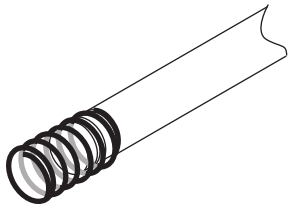

Figure 1-14. Spring Assemble to Rod

7. Slide end cap over spring (Figure 1-15).

Note When installing the rods, the spring end can be installed on either side of the chamber. The upper front rod is high in the chamber and the upper back rod is lower to allow access to the access port filter door. ▲

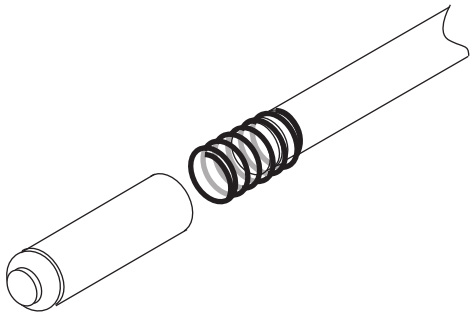

Figure 1-15. Spring End

8. Install one end of the rod into the appropriate hole in the duct sheet.

9. Compress the spring (under the end cap) to insert the other end of the rod into the hole in the duct sheet on the opposite side.

10. Figure 1-16 shows the four rods installed.

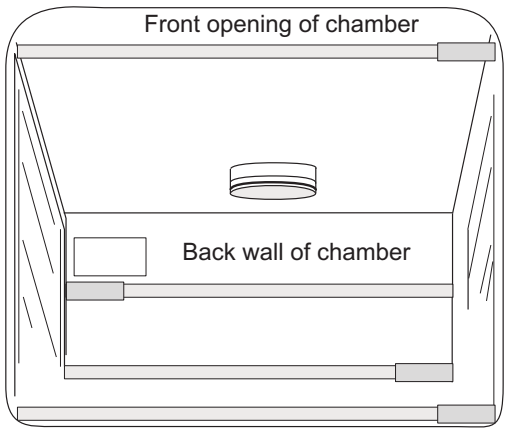

Figure 1-16. Four Rods Installed in Chamber

Access Port Filter & CO_2 Sensor Cover Plate

1. Locate the opening in the top left corner of the interior chamber. Remove the tape from the opening on the outside of the unit.
2. Locate the stopper with filter in the hardware bag. Lift the metal port cover and install the assembly in the opening inside the chamber. See Figure 1-17.
3. Also in the hardware bag is the CO_2 sensor cover plate. Install, using the 1/4-turn fasteners. Refer to Figure 1-17 for the location.

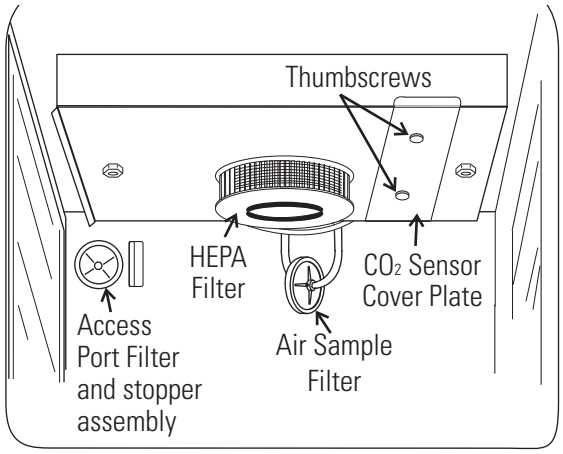

Figure 1-17. Filter and Plate

Air Sample Filter Installation

1. Remove the filter from the shipping bag.
2. Install the air sample filter assembly to the black hose barb behind the top duct.
3. Insert the other end of the filter assembly onto the metal tubing on the top duct. Refer to the Figure 1-18.

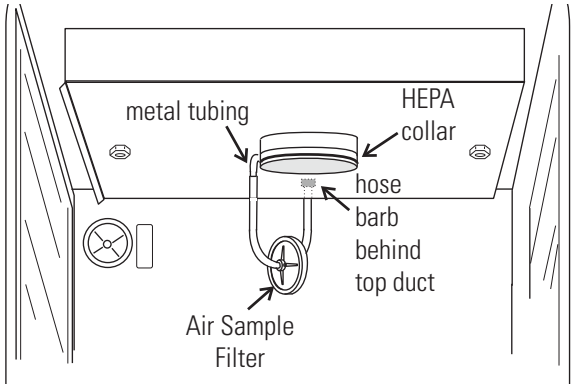

Figure 1-18. Air Sample Filter Installation

HEPA Filter Installation

Caution Be careful when the filter. The media can be damaged if it is mishandled. To avoid damage to the incubator, do not operate the unit without the HEPA filter in place. ▲

1. Remove the filter from the shipping box.
2. Remove the plastic coating from the filter, using caution not to touch the filter media.
3. Install the filter as shown in Figure 1-18. Refer to Section 5 for HEPA filter maintenance.

Leveling the Unit

Check the unit for being level by placing a bubble-style level on one of the shelves. Turn the hex nut on the leveler counterclockwise to lengthen the leg or clockwise to shorten it. Level the unit front-to-back and left-to-right.

Electrical Power Connection

See the serial tag on the side of the unit or the Specifications section for electrical specifications. Refer to the electrical schematics at the end of this manual.

Caution Serial tag rating is based on amperage draw during sterilization cycle. Normal operating amperage is much less. Ensure that electrical circuit will handle amp draw of sterilization cycle.

Connect the incubator to a grounded dedicated circuit only. The power cord connector is the mains disconnect device for the incubator. Position the unit to allow unobstructed access to the power cord so that it can be easily disconnected in case of an emergency. ▲

Plug the provided power cord into the power inlet connector on the back of the cabinet (Figure 1-19), then into the grounded, dedicated, electrical circuit.

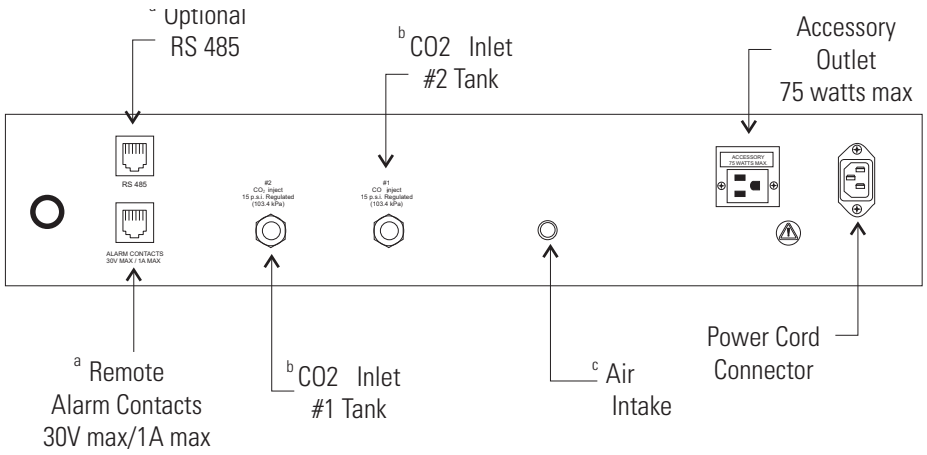

[a] RJ-II telephone style connectors

Figure 1-19. Back of Cabinet

Filling the Humidity Pan

Fill the humidity pan with sterile distilled water to within ½" of the top with 0.8 gallons (3 liters) of water. If the water cannot be sterilized, a 2% solution of quaternary ammonium can be used as a disinfectant additive to control bacteria and other organic contaminants, if desired. Place the pan directly in the center of the incubator floor to ensure optimum humidity and temperature response.

For optimum incubator operation, the recommended water type is sterile distilled Type 2 water with a pH between 7 and 9, and a resistivity between 50 kΩ - 1 MΩ-cm (conductivity of 1-20 µS/cm). Reverse osmosis (RO), deionized (DI), and ultrapure Type 1 water can corrode stainless steel, copper, glass and other incubator components over time because high purity water with low ionic content and high resistivity will actively pull ions from these materials. If sterile distilled Type 2 water is not readily available, then these other water types could be used by adding the necessary amount of a sterile solution of weak sodium bicarbonate to raise the pH between 7 and 9 and lower the resistivity between 50 kΩ - 1 MΩ-cm (conductivity of 1-20 µS/cm).

Distillation systems, as well as some types of reverse osmosis water purity systems, can produce water in the quality range specified. Tap water is not recommended as it may contain chlorine, which can deteriorate the stainless steel. Tap water may also have a high mineral content, which would produce a build-up of scale in the pan. High purity or ultra pure water is not recommended as it is an extremely aggressive solvent and will deteriorate the stainless steel.

Filling the Humidity Pan (continued)

High purity water has a resistance of above 1 M to 18 M Ohm. Even high purity water can contain bacteria and organic contaminants. Water should always be sterilized or treated with a decontaminant, safe for use with stainless steel as well as safe for the product, prior to being introduced into the humidity pan.

Check the level and change the water frequently to avoid contamination. Do not allow the water level to fluctuate significantly. “Dry-outs” will have an adverse effect on the humidity level and CO_2 calibration of the T/C units.

Caution Distilled or de-ionized water used in the humidity pan must be within a water quality resistance range of 50 K to 1 M Ohm/cm to protect and prolong the life of the stainless steel. Use of water outside the specified range will decrease the operating life of the unit and may void warranty. ▲

Connecting the CO_2 Gas Supply

Warning High concentrations of CO_2 gas can cause asphyxiation! OSHA Standards specify that employee exposure to carbon dioxide in any eight-hour shift of a 40-hour work week shall not exceed the eight-hour time weighted average of 5000 PPM (0.5% CO_2). The short term exposure limit for 15 minutes or less is 30,000 ppm (3% CO_2). Carbon dioxide monitors are recommended for confined areas where concentrations of carbon dioxide gas can accumulate. ▲

Warning This incubator is designed to be operated with CO_2 gas only. Connecting a flammable or toxic gas can result in a hazardous condition. Gases other than CO_2 should not be connected to this equipment. CO_2 gas cylinders have a UN1013 label on the cylinder and are equipped with a CGA 320 outlet valve. Check the gas cylinder for the proper identification labels. The CO_2 gas supply being connected to the incubator should be industrial grade, 99.5% pure. Do not use CO_2 gas cylinders equipped with siphon tubes. A siphon tube is used to extract liquid CO2 from the cylinder which can damage the pressure regulator. Consult with your gas supplier to ensure that the CO_2 cylinder does not contain a siphon tube. Gas cylinders should also be secured to a wall or other stationary object to prevent them from tipping.
A two-stage CO_2 pressure regulator is required to be installed on the outlet valve of the gas cylinder. Input pressure to the incubator must be maintained at 15 psig (103.4 kPa) for proper performance of the CO_2 control system. A single stage CO_2 pressure regulator will not maintain 15 psig (103.4 kPa) to the incubator as the pressure in the CO_2 cylinder decreases; therefore, a two stage regulator is recommended. ▲

Connecting CO_2 Gas Supply (continued)

Warning If higher purity CO_2 is desired inside the incubator (greater than 99.5% pure), the pressure regulator should be constructed with a stainless steel diaphragm, along with specifying the purity of the CO_2 from the gas supplier. Follow the manufacturer's instructions to ensure proper and safe installation of the pressure regulator on the gas cylinder.
Consult your facility safety officer to ensure that the equipment is installed in accordance with the codes and regulations that are applicable in your area. ▲

The CO_2 gas supply being connected should be industrial grade 99.5% pure and should not contain siphon tubes. Install a two-stage pressure regulator at the cylinder outlet. The high pressure gauge at the tank should have 0-2000 psig range. The low pressure gauge, at the incubator inlet, should have a 0-30 psig range. Input pressure to the incubator must be maintained at 15 psig (103.4 kPa).

The incubator has serrated fittings on the back of the cabinet to connect the gas supply. Refer to Figure 1-19. The fitting is labeled CO2 Inlet #1 Tank. Make sure that the connections are secured with clamps. Check all fittings for leaks.

Incubator Start-Up

With the incubator properly installed and connected to power, the humidity pan filled, and the unit connected to gas supplies, system setpoints can be entered. The following setpoints can be entered in SET mode: Temperature, Overtemperature and CO_2. To enter SET mode, press the MODE key until the SET indicator lights. Press the right and/or left arrow keys until the proper parameter appears in the message display. See Chart 1-1 for more detail.

Setting the Operating Temperature

All Series 8000DH incubators have an operating temperature range of 10°C to 50°C, depending on ambient temperature. The incubator is shipped from the factory with a temperature setpoint of 10°C.
At this setting, all heaters and alarms are turned off.

Setting the Operating Temperature (continued)

To change the operating temperature setpoint:

1. Press the MODE key until the SET indicator lights.
2. Press the right arrow until "TEMP XX.XC" is displayed in the message display.
3. Press the up/down arrow key until the desired temperature setpoint is displayed.
4. Press ENTER to save the setpoint.
5. Press the MODE key until the RUN indicator lights for RUN mode or press the right/left arrow keys to go to next/previous parameter.

Setting the Overtemp Setpoint

Caution The independent overtemp system is designed as a safety to protect the incubator only. It is not intended to protect or limit the maximum temperature of the cell cultures or customer's equipment inside the incubator if an overtemp condition occurs. ▲

Series 8000DH incubators are equipped with a secondary temperature monitoring system to monitor the air temperature inside the cabinet. This system is designed as a safety device to turn off all heaters in the event of a temperature control failure. Temperature control in the incubator will be ±1° of the overtemp setpoint.

The overtemperature is set by the factory (default) at 40°C. However, the overtemp can be set up to 55°C in 0.5° increments.

If the incubator's operating temperature setpoint is set above the overtemp setpoint, the overtemp setpoint will automatically update to 1°C above the temperature setpoint. It is recommended that the overtemp setpoint be maintained at 1°C over the operating temperature setpoint.

Setting the Overtemp Setpoint (continued)

To set the Overtemp setpoint:

1. Press the MODE key until the SET indicator lights.
2. Press the right arrow until OTEMP XX.XC is displayed in the message display.
3. Press the up or down arrow key until the desired Overtemp setpoint is displayed.
4. Press ENTER to save the setting.
5. Press the MODE key until the RUN indicator lights or press the right or left arrow to go to the next or previous parameter.

Setting the CO_2 Setpoint

All T/C CO_2 cells are calibrated at the factory at 37°C, high humidity, and 10% CO_2. Therefore, if a temperature setpoint of 37°C has been entered, the humidity pan has been filled and the CO_2 control is to run between 0-10% with a T/C CO_2 sensor, the CO_2 setpoint may be entered immediately. Otherwise, it is important to allow the unit 12 hours to stabilize at the temperature setpoint before entering the CO_2 setpoint.

Both models of the incubator have a CO_2 setpoint range of 0.0% to 20.0%. The incubator is shipped from the factory with a CO_2 setpoint of 0.0%. At this setting, all CO_2 control and alarms are turned off.
To change the CO_2 setpoint:

1. Press the MODE key until the SET indicator lights.
2. Press the right arrow until “CO2 XX.X%” is displayed in the message display.
3. Press the up/down arrows until the desired CO_2 setpoint is displayed.
4. Press ENTER to save the setpoint.
5. Press the MODE key until the RUN indicator lights to go to RUN mode or press the right/left arrow keys to go to next/previous parameter.

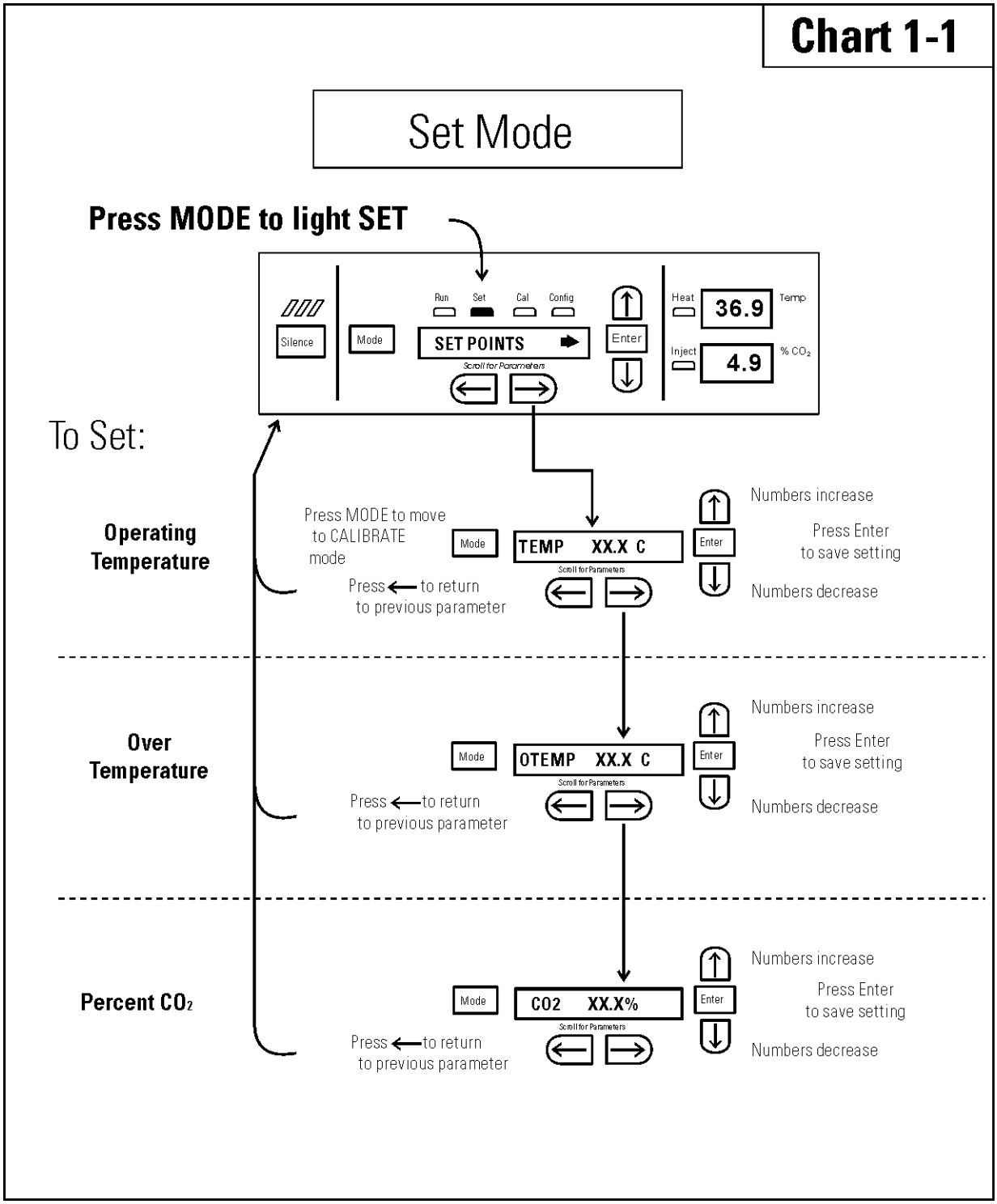
Chart 1-1
Set Mode
Press MODE to light SET
Silence
Mode
Run
Set
Cal
Config
SET POINTS
Scroll for Parameters
Enter
Heat
36.9
Temp
Inject
4.9
% CO2
To Set:
Operating Temperature
Press MODE to move to CALIBRATE mode
Mode
TEMP XX.X C
Scroll for Parameters
Press ← to return to previous parameter
Enter
Numbers increase
Press Enter to save setting
Numbers decrease
Over Temperature
OTEMP XX.X C
Percent CO2
CO2 XX.X%

Section 2 Calibration

After the unit has stabilized, several different systems can be calibrated. In Calibration mode, the air temperature, CO_2 and RH levels can be calibrated to reference instruments. To access Calibration mode, press the MODE key until the CAL indicator lights. Press the right and/or left arrow until the appropriate parameter appears in the message display. See Chart 2-1 at the end of this section for more detail.

Calibration frequency is dependent on use, ambient conditions and accuracy required. A good laboratory practice would require at least an annual calibration check. On new installations, all parameters should be checked after the stabilization period.

Prior to calibration, the user should be aware of the following system functions. While the unit is in Calibration mode, all system control functions are stopped so the unit remains stable. Readout of the system being calibrated appears on the message display. If no keys are pressed for approximately five minutes while in Calibration mode, the system resets to RUN mode so control functions are reactivated.

Caution Before making any calibration or adjustments to the unit, it is imperative that all reference instruments be properly calibrated. ▲

Temperature

Before calibration, allow the cabinet temperature to stabilize. Place the calibrated instrument in the center of the chamber. The instrument should be in the airflow, not against the shelf.

Temperature Stabilization Periods

Start-Up - Allow 12 hours for the temperature in the cabinet to stabilize before proceeding.

Already Operating - Allow at least 2 hours after the display reaches setpoint for temperature to stabilize before proceeding.

Temperature (continued)

1. Press the MODE key until CAL indicator lights.
2. Press the right arrow until "TEMPCAL XX.X" appears in the message display.
3. Press up/down arrow to match display to calibrated instrument.
4. Press ENTER to store calibration.
5. Press the MODE key to return to RUN or the right/left arrow to go to next/previous parameter.

Thermal Conductivity CO_2 System

Models 3540 and 3541 have a thermal conductivity (T/C) CO_2 sensor. Thermal conductivity of the incubator atmosphere is not only effected by the quantity of CO_2 present but also by the air temperature and water vapor present in the incubator atmosphere. In monitoring the effects of CO_2, air temperature and absolute humidity must be held constant so any change in thermal conductivity is caused by a change in CO_2 concentration.

Changing temperature or changing from elevated humidity to room ambient humidity levels will necessitate a re-calibration of the CO_2 control.

Some T/C CO_2 sensors go through an aging period, especially on new installations. Calibration should be checked on a weekly basis and adjusted as necessary. When stabilization occurs, checks can become less frequent.

T/C CO_2 Sensor Stabilization Periods

Start -Up - The CO_2 sensor has been calibrated at the factory for 37°C and elevated humidity. Allow the temperature, humidity and CO_2 levels in the chamber to stabilize at least 12 hours before checking the CO_2 concentration with an independent instrument.

Presently Operating - Make sure the chamber doors are closed. Allow at least 2 hours after the temperature and CO_2 displays reach their setpoints for chamber atmosphere stabilization.

Thermal Conductivity CO_2 System (continued)

1. Make sure the stabilization periods outlined above are followed.
2. Sample the chamber atmosphere through the sample port with an independent instrument. Sample the atmosphere at least 3 times to ensure accuracy of the instrument.
3. Press the MODE key until the CAL indicator lights.
4. Press the right arrow until "CO2 CAL XX.X" is displayed in the message display.
5. Press the up /down arrows to change the display to match the independent instrument.
6. Press ENTER to store the calibration.
7. Press the MODE key to return to RUN or the right or left arrows to go to the next/ previous parameter.

Infrared CO_2 System

Models 3542 and 3543 have an infrared (IR) CO_2 sensor. Infrared CO_2 sensors are not effected by chamber atmosphere temperature or humidity. However, the light detector in the sensor is effected by wide temperature changes. Therefore, changing temperature setpoints could necessitate a recalibration of the CO_2. Chamber temperature should be allowed to stabilize before checking CO_2 concentrations with an independent instrument, especially on start-up.

IR CO_2 Sensor Stabilization Times

Start-Up- Allow the temperature and the CO_2 of the cabinet to stabilize at least 12 hours before proceeding.

Presently Operating - Allow CO_2 to stabilize at least 2 hours at setpoint before proceeding.

Infrared CO_2 System (continued)

1. Measure the CO_2 concentration in the chamber through the gas sample port with a Fyrite or other independent instrument. Several readings should be taken to ensure accuracy.
2. Press the MODE key until the CAL indicator lights.
3. Press the right arrow until "IR CAL XX.X" appears in the message display.
4. Press the up/down arrow to adjust the display to match the independent instrument reading.
5. Press ENTER to store the calibration.
6. Press the MODE key to return to RUN mode.

Relative Humidity

Model 3540 and 3541 incubators are equipped with an optional direct-readout relative humidity sensor. This is a readout only of the chamber relative humidity level. It does not provide any control of the relative humidity in the cabinet.

Relative Humidity Stabilization Times

Start-Up - Allow 12 hours for the relative humidity and temperature in the chamber to stabilize before proceeding.

Already Operating - Allow at least 2 hours after temperature display reaches setpoint for relative humidity to stabilize before proceeding.

1. Place an accurate independent instrument in the center of the chamber. Allow at least 30 minutes for RH to stabilize.
2. Press the MODE key until the CAL indicator lights.
3. Press the right arrow key until "RH XX%" appears in the message display.
4. Press the up/down arrow to match the display to the independent instrument.
5. Press ENTER to store the calibration.
6. Press the MODE key to return to RUN mode.

Relative Humidity (continued)

If a reliable RH measuring device is not available, the display can be calibrated to a typical level;

1. Follow the RH stabilization periods outlined above.

2. With a full humidity pan and stable temperature, the relative humidity in the chamber will be 95%.

3. Using Step 3-5 of the relative humidity sensor adjustment, adjust the display to 95%.

This calibration method should be accurate to within 5%.

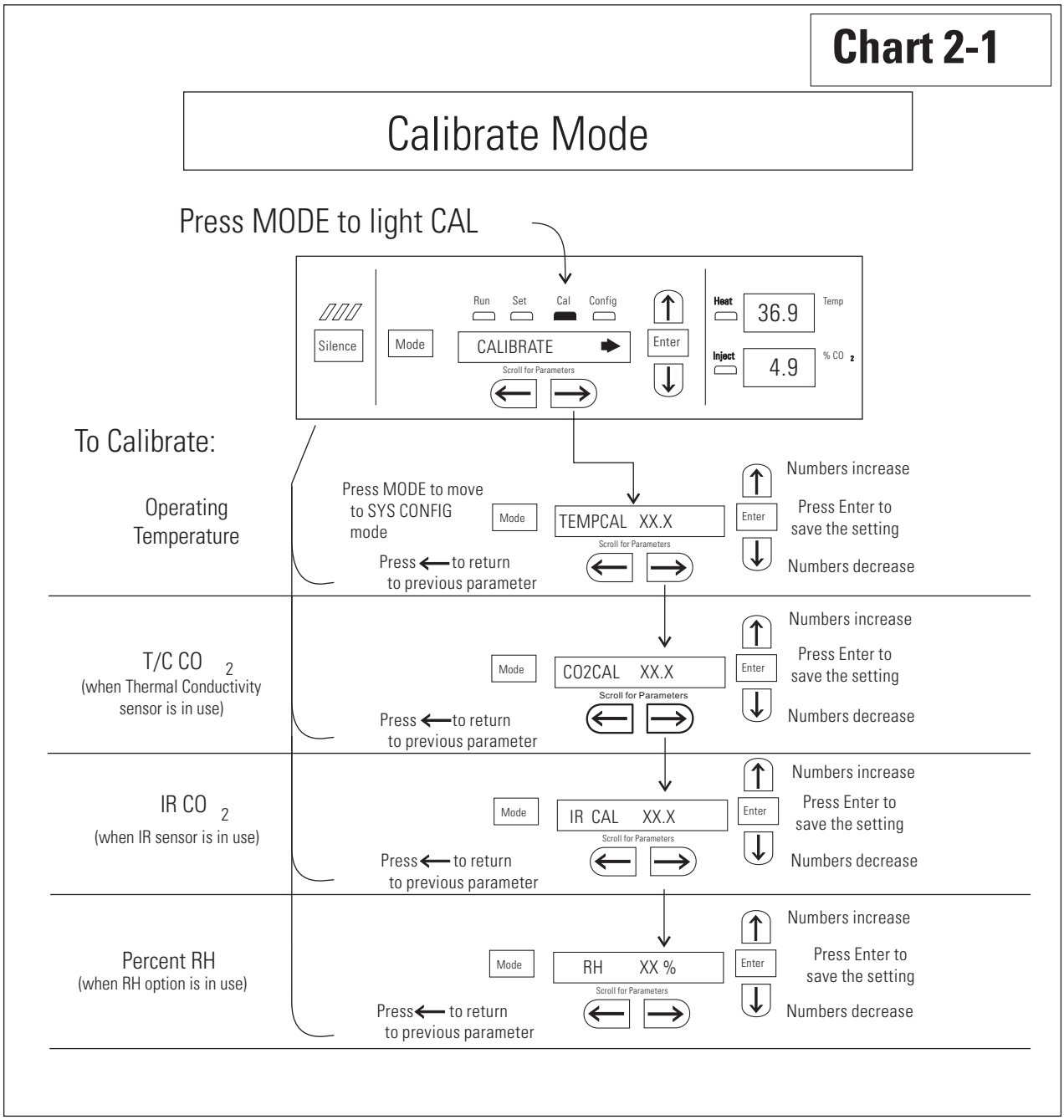
Chart 2-1
Calibrate Mode
Press MODE to light CAL
Silence
Mode
Run
Set
Cal
Config
CALIBRATE
Scroll for Parameters
Enter
Heat
36.9
Temp
Inject
4.9
% CO 2
To Calibrate:
Operating Temperature
Press MODE to move to SYS CONFIG mode
Mode
TEMPCAL XX.X
Scroll for Parameters
Press ← to return to previous parameter
Enter
Numbers increase
Press Enter to save the setting
Numbers decrease
T/C CO 2
(when Thermal Conductivity sensor is in use)
CO2CAL XX.X
IR CO 2
(when IR sensor is in use)
IR CAL XX.X
Percent RH
(when RH option is in use)
RH XX %
Chart 2-1.cdr

Section 3 Configuration

Several features available in Configuration mode allow custom setup of the incubator. These features are listed with descriptions below. All features may not be necessary in all applications, but are available if needed.
To enter Configuration mode, press the MODE key until the CON indicator lights. Press the right and/or left arrow until the appropriate parameter appears in the message display. See Chart 3-1 for more detail.

Turn Audible Alarm ON/OFF

The audible alarm can be turned on or off. The factory setting is ON.

1. Press the MODE key until the CON indicator lights.
2. Press the right arrow until AUDIBLE XXX shows in the message display.
3. Press the up/down arrow to toggle AUDIBLE ON/OFF.
4. Press ENTER to save the setting.
5. Press the MODE key to return to RUN mode or right/left arrow to go to next/previous parameter.

New HEPA Filter

When the REPLACE HEPA reminder displays and the visual alarm flashes, the specified time has elapsed and the HEPA filter should be replaced. To clear the display and reset the timer after replacing the HEPA filter with a new one, follow the steps below.

1. Press the MODE key until the CON indicator lights.
2. Press the right arrow until NEW HEPA shows in the message display.
3. Press ENTER to restart the timer and clear the REPLACE HEPA alarm.
4. Press the MODE key to return to RUN mode.

Set REPLACE HEPA filter reminder

A HEPA filter replacement timer can be set for a specific amount of time, from 1 to 12 months of actual unit running time. Time will not accrue when the unit is turned off. The default time is 6 months. When the allotted time runs out, REPLACE HEPA appears in the display and the visual alarm flashes. To set the reminder, use the following procedure.

1. Press the MODE key until the CON indicator lights.
2. Press the right arrow until REPL HEPA XX is displayed.
3. Press the up/down arrow to choose the number of months desired.
4. Press ENTER to save the number.
5. Press the MODE key to return to RUN mode or right/left arrow to go to next/previous parameter.

Note After the reminder has been set, check the allotted time remaining by going to Configuration mode, then pressing the right arrow until NEW HEPA XXX displays. This number is the remaining days before the filter replacement time specified runs out. For example, if 12 months was chosen in the REPL HEPA XX message display, the NEW HEPA number would be 365 days. ▲

Set Access Code

A 3-digit Access Code can be entered to avoid unauthorized personnel from changing the setpoints, calibration, or configuration. A setting of 000 bypasses the access code. The factory setting is 000.

1. Press the MODE key until the CON indicator lights.
2. Press the right arrow until ACC CODE XXX shows in the message display.
3. Press up/down arrow to change the access code.
4. Press ENTER to save the access code.
5. Press the MODE key to return to the RUN mode or right/left arrow to go to next/previous parameter.

Set Low Temp Alarm Limit (tracking alarm)

The low temp alarm limit is the deviation from the temperature setpoint which causes a low temp alarm. The low temp alarm is variable from 0.5° below setpoint to 5° below setpoint. The factory setting is 1° below setpoint. A minus sign (-) in the display indicates that the alarm setting is below the setpoint.

1. Press the MODE key until the CON indicator lights.
2. Press the right arrow until TEMP LO -X.X shows in the message display.
3. Press up/down arrow to change the low temp alarm limit.
4. Press ENTER to save the low temp alarm limit.
5. Press the MODE key to return to RUN mode or right/left arrow to go to next/previous parameter.

Enable Low Temp Alarm to Trip Contacts

The low temperature alarm can be programmed to trip the remote alarm contacts. A setting of ON allows this, an OFF setting blocks the low temp alarm from tripping the contacts. The factory setting is ON.

1. Press the MODE key until the CON indicator lights.
2. Press the right arrow until TMP RLY XXX displays.
3. Press the up/down key to toggle the setting ON/OFF.
4. Press ENTER to save the setting.
5. Press the MODE key to return to RUN mode, or the right/left arrow to go to next/previous parameter.

Set Low CO_2 Alarm Limit (tracking alarm)

The low CO_2 alarm limit is the deviation from the CO_2 setpoint which will cause a low CO_2 alarm. The setpoint is variable from 0.5% CO_2 below setpoint to 5.0% CO_2 below setpoint. The factory setting is 1.0% CO_2 below setpoint. A minus sign (-) in the display indicates that the alarm setting is below the setpoint.

1. Press the MODE key until the CON indicator lights.
2. Press the right arrow until CO2 LO -X.X shows in the message display.
3. Press up/down arrow to change the low CO_2 alarm limit.
4. Press ENTER to save the low CO_2 alarm limit.
5. Press the MODE key to return to RUN mode or right/left arrow to go to next/previous parameter.

Set High CO_2 Alarm Limit (tracking alarm)

The high CO_2 alarm limit is the deviation from the CO_2 setpoint which will cause a high CO_2 alarm. The setpoint is variable from 0.5% CO_2 above setpoint to 5.0% CO_2 above setpoint. The factory setting is 1.0% CO_2 above setpoint.

1. Press the MODE key until the CON indicator lights.
2. Press the right arrow until CO2 HI X.X shows in the message display.
3. Press up/down arrow to change the high CO_2 alarm limit.
4. Press ENTER to save the high CO_2 alarm limit.
5. Press the MODE key to return to RUN mode, or right/left arrow to go to next/previous parameter.

Enable CO_2 Alarms to Trip Contacts

High and Low CO_2 alarms can be programmed to trip the remote alarm contacts. A setting of ON allows this, a setting of OFF blocks CO_2 alarms from tripping the contacts. The factory setting is ON.

1. Press the MODE key until the CON indicator lights.
2. Press the right arrow until CO2 RLY XXX shows in the message display.
3. Press up/down arrow to toggle the setting ON/OFF.
4. Press ENTER to save the setting.
5. Press the MODE key to return to RUN mode or right/left arrow to go to next/previous parameter.

Set Zero #, Span #for T/C CO_2 Sensors

If a new T/C CO_2 sensor is being installed, the two numbers on the factory installed sticker on the T/C cell must be entered to calibrate CO_2 in the unit.

Note For the technician's convenience, a second label containing the two numbers is supplied with the new T/C cell and should be applied to cover the original label, inside the electronics drawer. ▲

1. Press the MODE key until the CON indicator lights.
2. Press the right arrow until T/CZ# XXXX shows in the message display.
3. Press up/down arrow to change the zero number to match the sticker.
4. Press ENTER to save the setting.
5. Press the MODE key until the CON indicator lights.
6. Press the right arrow until T/CS# XXXX shows in the message display.
8. Press ENTER to save the setting.
9. Press the MODE key to return to RUN mode or right/left arrow to go to next/previous parameter.

Setting a Low RH Alarm Limit

On units with the RH option installed, a low RH alarm limit may be entered. The low RH alarm limit is the %RH in the cabinet that causes a low RH alarm. The setpoint is variable from setpoint 0 to 90% RH. The factory setting is 0% RH, which disables the alarm.

1. Press the Mode key until the Config indicator lights.
2. Press the right arrow until RH LO X% displays in the message center.
3. Press up/down arrow to change the RH low alarm limit.
4. Press Enter to save the RH low alarm limit.
5. Press the Mode key to return to Run mode or right/left to go to next/previous parameter.

Enable RH Alarms to Trip Contacts

The low RH alarm can be programmed to trip the remote alarm contacts. A setting of ON allows this, a setting of OFF blocks the RH alarm from tripping the contacts. The factory setting is ON.

1. Press the MODE key until the CON indicator lights.
2. Press the right arrow until RH RLY XXX shows in the message display.
3. Press up/down arrow to toggle the setting ON/OFF.
4. Press ENTER to save the setting.
5. Press the MODE key to return to RUN mode or right/left arrow to go to next/previous parameter.

Enabling Temp/RH to be Displayed

On units equipped with the RH option, the upper seven segment display on the control panel can be configured to display Temp continuously, RH continuously, or toggle between Temp and RH. If the units does not have RH, the upper display always shows temperature. If temperature is set to ON, and the RH is set OFF, temperature shows continuously.
If temperature is set to OFF and RH is set to ON, RH shows continuously. If both are turned ON, the display toggles between the two. The factory setting defaults to toggle mode if the RH option is present.

1. Press the MODE key until the CON indicator lights.
2. Press the right arrow until DISP TMP XXX or DISP RH XXX shows in the message display.
3. Press up/down arrow to toggle the setting ON/OFF.
4. Press ENTER to save the setting.
5. Press the MODE key to return to RUN mode or right/left arrow to go to next/previous parameter.

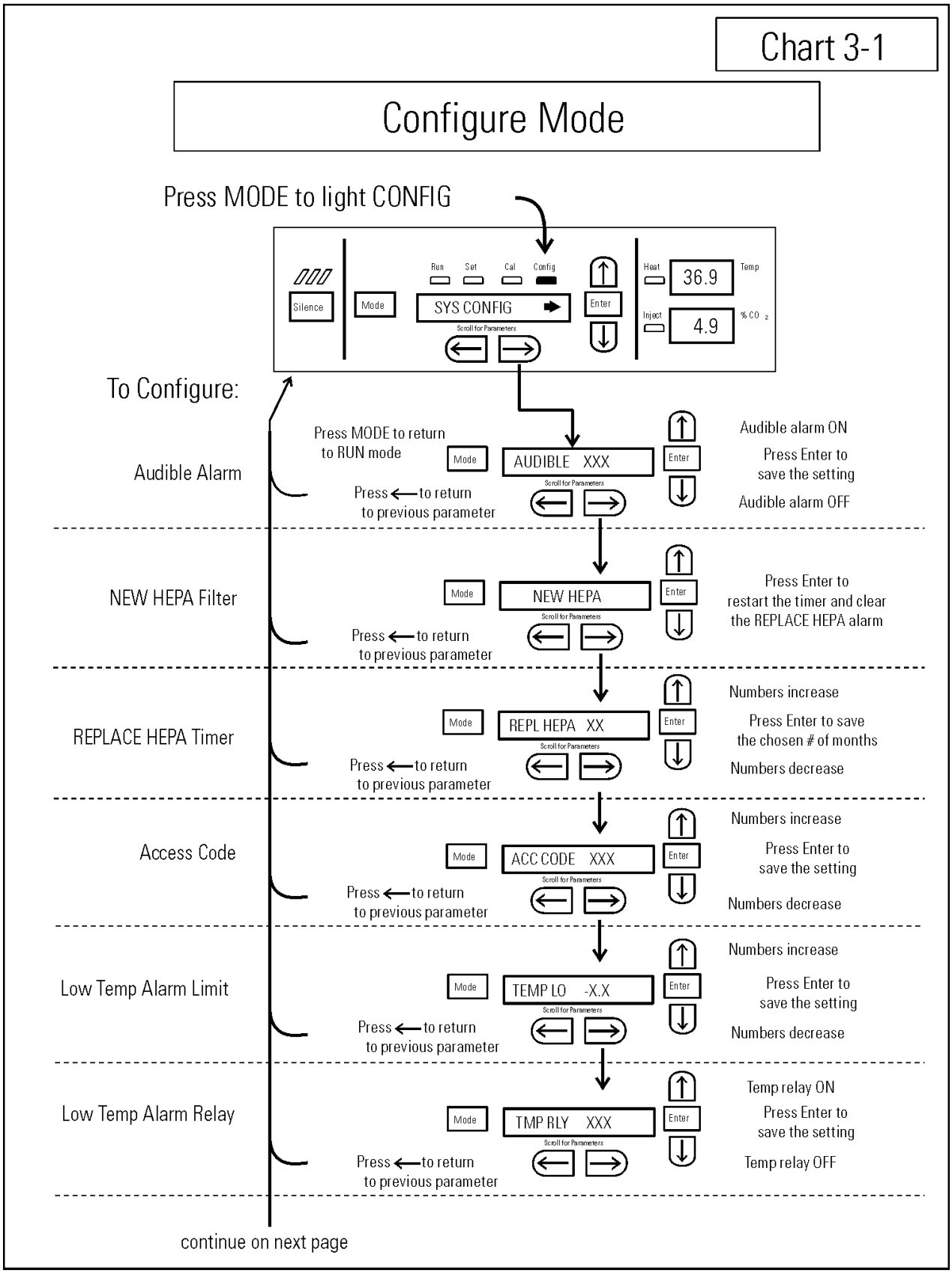
Chart 3-1
Configure Mode
Press MODE to light CONFIG
Silence
Mode
Run
Set
Cal
Config
SYS CONFIG
Scroll for Parameters
Enter
Heat
36.9
Temp
Inject
4.9
% CO 2
To Configure:
Audible Alarm
Press MODE to return to RUN mode
Press ← to return to previous parameter
AUDIBLE XXX
Audible alarm ON
Press Enter to save the setting
Audible alarm OFF
NEW HEPA Filter
NEW HEPA
Press Enter to restart the timer and clear the REPLACE HEPA alarm
REPLACE HEPA Timer
REPL HEPA XX
Numbers increase
Press Enter to save the chosen # of months
Numbers decrease
Access Code
ACC CODE XXX
Numbers increase
Press Enter to save the setting
Numbers decrease
Low Temp Alarm Limit
TEMP LO -X.X
Numbers increase
Press Enter to save the setting
Numbers decrease
Low Temp Alarm Relay
TMP RLY XXX
Temp relay ON
Press Enter to save the setting
Temp relay OFF
continue on next page

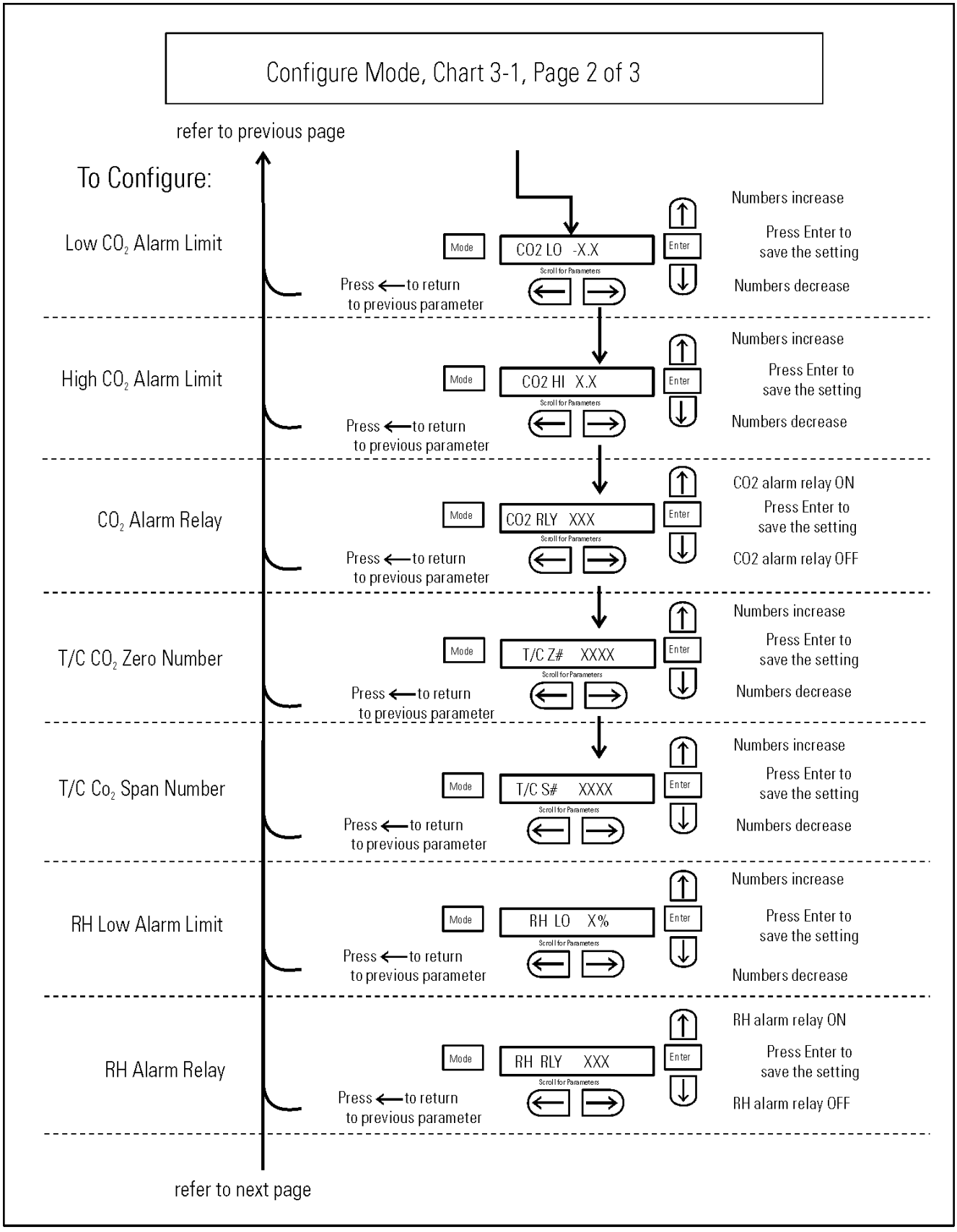
Configure Mode, Chart 3-1, Page 2 of 3
refer to previous page
To Configure:
Low CO_2 Alarm Limit
Mode
CO2 LO -X.X
Enter
Scroll for Parameters
Numbers increase
Press Enter to save the setting
Numbers decrease
Press ← to return to previous parameter
High CO_2 Alarm Limit
Mode
CO2 HI X.X
Enter
Scroll for Parameters
Numbers increase
Press Enter to save the setting
Numbers decrease
Press ← to return to previous parameter
CO_2 Alarm Relay
Mode
CO2 RLY XXX
Enter
Scroll for Parameters
CO2 alarm relay ON
Press Enter to save the setting
CO2 alarm relay OFF
Press ← to return to previous parameter
T/C CO_2 Zero Number
Mode
T/C Z# XXXX
Enter
Scroll for Parameters
Numbers increase
Press Enter to save the setting
Numbers decrease
Press ← to return to previous parameter
T/C Co_2 Span Number
Mode
T/C S# XXXX
Enter
Scroll for Parameters
Numbers increase
Press Enter to save the setting
Numbers decrease
Press ← to return to previous parameter
RH Low Alarm Limit
Mode
RH LO X%
Enter
Scroll for Parameters
Numbers increase
Press Enter to save the setting
Numbers decrease
Press ← to return to previous parameter
RH Alarm Relay
Mode
RH RLY XXX
Enter
Scroll for Parameters
RH alarm relay ON
Press Enter to save the setting
RH alarm relay OFF
Press ← to return to previous parameter
refer to next page

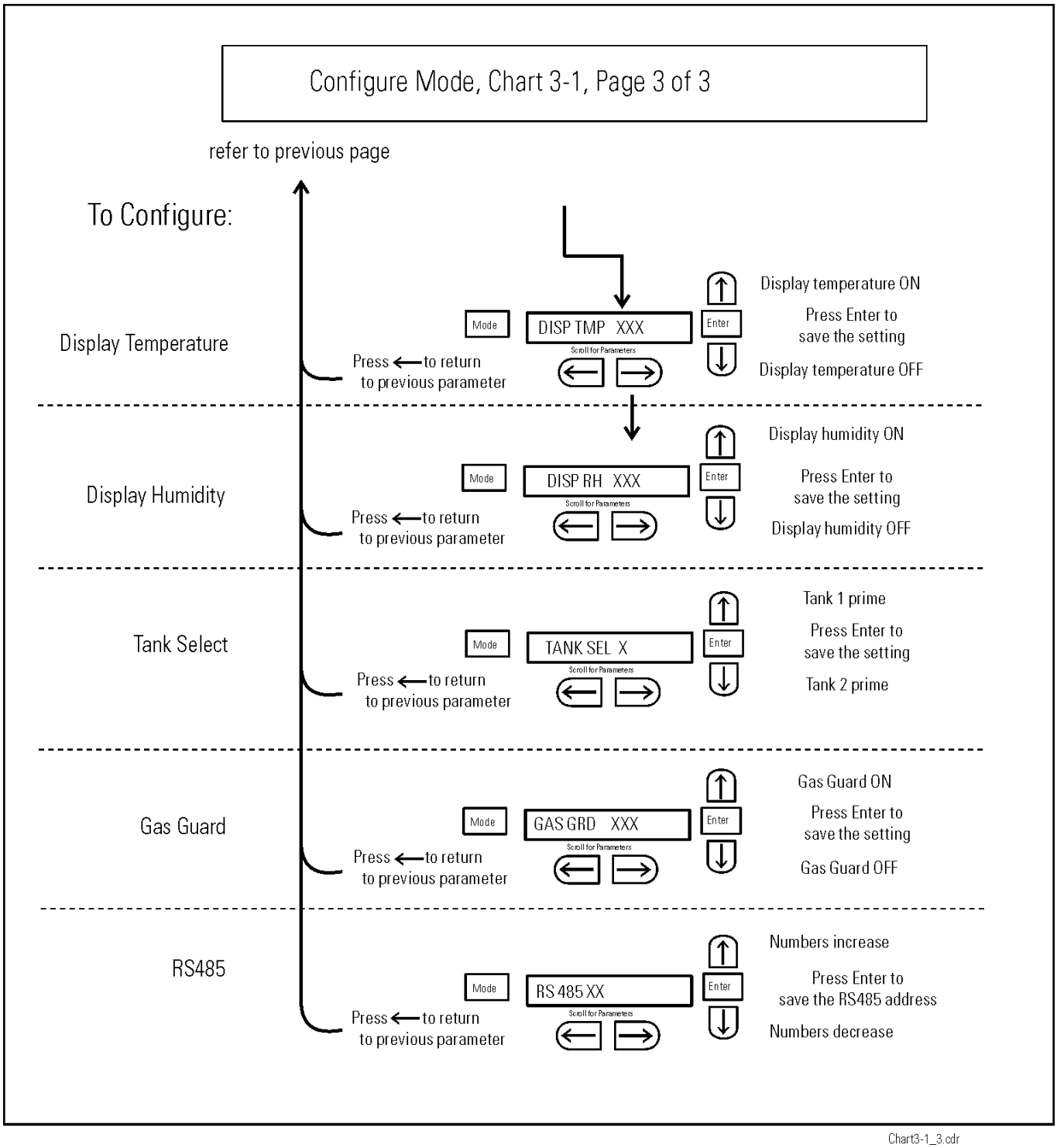
Configure Mode, Chart 3-1, Page 3 of 3
refer to previous page
To Configure:
Display Temperature
Mode
DISP TMP XXX
Scroll for Parameters
Enter
Display temperature ON
Press Enter to save the setting
Display temperature OFF
Press ← to return to previous parameter
Display Humidity
Mode
DISP RH XXX
Scroll for Parameters
Enter
Display humidity ON
Press Enter to save the setting
Display humidity OFF
Press ← to return to previous parameter
Tank Select
Mode
TANK SEL X
Scroll for Parameters
Enter
Tank 1 prime
Press Enter to save the setting
Tank 2 prime
Press ← to return to previous parameter
Gas Guard
Mode
GAS GRD XXX
Scroll for Parameters
Enter
Gas Guard ON
Press Enter to save the setting
Gas Guard OFF
Press ← to return to previous parameter
RS485
Mode
RS 485 XX
Scroll for Parameters
Enter
Numbers increase
Press Enter to save the RS485 address
Numbers decrease
Press ← to return to previous parameter
Chart3-1_3.cdr

Section 4 Alarms

The Series 8000DH incubator alarm system is shown in the table below. When an alarm is active, the message appears in the LED message display. Pressing disables the audible alarm for the ringback period. However, the visual alarm continues until the incubator returns to a normal condition. The alarms are momentary alarms only. When an alarm condition occurs and then returns to normal, the incubator automatically clears the alarm condition and the message display.

Table 4-1. Alarm and Description

Description	Message	Delay	Ringback	Relay
No alarm condition exists	SYSTEM OK or CLASS 100	-----	-----	-----
Temp > Otemp Set point	SYS IN OTEMP	0 min.	15 min.	Yes
Air Temp Sensor Fault (See Section 4)	AIR SNSR ERR	0 min.	15 min.	No
Temperature Controller Failure (See Sect. 4)	TMP CTRL ERR	0 min.	15 min.	YES
CO2 Sensor Fault (See Section 4)	CO2 SNSR ERR	0 min.	15 min.	No
Replace HEPA filter reminder-set time expired (See Section 3)	REPLACE HEPA	0 min.	-----	No
Inner Door is Open	DOOR OPEN	15 min.	15 min.	No
CO2 is higher than CO2 High Tracking Alarm	CO2 IS HIGH	15 min.	15 min.	Programmable
CO2 is lower than CO2 Low Tracking Alarm	CO2 IS LOW	15 min.	15 min.	Programmable
TEMP is lower TEMP Low Tracking Alarm	TEMP IS LOW	15 min.	15 min.	Programmable
RH is lower than RH Low Limit Alarm (RH option)	RH IS LOW	30 min.	15 min.	Programmable

- All alarm delays and ringback times are ±30 seconds -

When multiple alarm conditions occur, active messages are shown in the message display one at a time, updating at 5 second intervals. Pressing during multiple alarms causes all active alarms to be silenced and to ring back in 15 minutes.

The TEMP IS LOW alarm is disabled when the Temp set point is 10°C. The CO_2 alarms are disabled when the CO_2 set point is 0.0%.

Temp Controller Failure TMP CNTR ERR

In addition to other safety features designed into Series 8000DH incubators, a thermostat is provided to monitor the cabinet's temperature. In the unlikely event of a temperature control failure, the thermostat will turn off all heaters at a cabinet temperature of 160°C, ±5%. This is intended to be a safety feature to protect the incubator and is not intended to protect the cell cultures or the equipment inside the chamber should a temperature control failure occur. Should such a failure occur, contact the Technical Services Department or your local distributor.

Sensor Fault Alarms

The microprocessor in Series 8000DH incubators continually scans all available sensors to ensure that they are operating properly. Should an error be detected, the incubator sounds an alarm and shows the appropriate message. Contact the Technical Services Department or your local distributor.

PREVENTIVE MAINTENANCE

Incubators

Your equipment has been thoroughly tested and calibrated before shipment. Regular preventive maintenance is important to keep your unit functioning properly. The operator should perform routine cleaning and maintenance on a regular basis. For maximum performance and efficiency, it is recommended the unit be checked and calibrated periodically by a qualified service technician.

The following is a condensed list of preventive maintenance requirements. See the specified section of the operating manual for further details.

Thermo Fisher Scientific has qualified service technicians, using NIST traceable instruments, available in many areas. For more information on Preventive Maintenance or Extended Warranties, please contact Technical Services.

Cleaning and calibration adjustment intervals are dependent upon use, environmental conditions and accuracy required.

Tips for all incubators:

- Do NOT use bleach or any disinfectant that has high chlorine content.
- Use sterile, distilled or demineralized water.
- Avoid spraying cleaner on the CO_2 sensor.
- Do not use powdered gloves for tissue cultures.

Refer to Manual Section	Action	Daily	Weekly	Monthly	3 to 6 Months	Yearly
--	Check CO_2 tank levels.	✓				
--	Inspect door latch, hinges and door gasket seal.					✓
1	Check water level in the humidity pan, ½" from top.		✓			
2	* Verify and document CO_2, humidity and temperature calibration, as applicable (See Calibration).					✓
	Disinfect the interior of the incubator (See Routine Maintenance).				✓	
1	Replace HEPA, access port filter, air sample filter, and CO_2 filters*, if applicable (or as needed).					✓
5	Perform sterilization cycle as needed.					
--	Tubing Maintenance and Inspection: Inspect all tubing and connections & Replace any tubing that shows signs of degradation or damage.				✓	

**** Qualified service technicians only***

Section 5 Routine Maintenance

Caution Before using any cleaning or decontamination method except those recommended by the manufacturer, users must check with the manufacturer that the proposed method will not damage the equipment. ▲

Warning It is the responsibility of the user to immediately clean up after all accidental spills of hazardous materials. Be certain to follow local EHS policies with regards to personal protective equipment, cleaning, and disposal. ▲

Use an appropriate disinfectant, such as quaternary ammonium. All articles and surfaces must be thoroughly cleaned, rinsed and rough-dried. ▲

Warning Alcohol, even a 70% solution, is volatile and flammable. Use it only in a well ventilated area that is free from open flame. If any component is cleaned with alcohol, do not expose the component to open flame or other possible hazard. Allow the alcohol to fully dry before turning power on. ▲

Warning Do not spray the T/C sensor with flammable solutions. The internal temperature of the CO2 sensor is approximately 150°C when the unit is in operation. Allow sufficient time for the sensor to cool before cleaning. ▲

Caution Do not use strong alkaline or caustic agents. Stainless steel is corrosion resistant, not corrosion proof. Do not use solutions of sodium hypochlorite (bleach), as they may also cause pitting and rusting. ▲

Note If condensation is visible on the ceiling of the chamber, yet the message center does not display ADD WATER, then the liquid level switch could be faulty. Call Technical Services. ▲

Warning If the unit has been in service, disconnect the power cord from both the unit and the power source, turn off all gas regulators and allow the unit to cool before disinfecting. ▲

Clean Chamber Interior

1. Remove the shelves, access port filter assembly, HEPA filter, air sample filter and tubing, and the left and right duct sheets. Discard the HEPA filters and the access port filter assembly. See Figure 5-1.

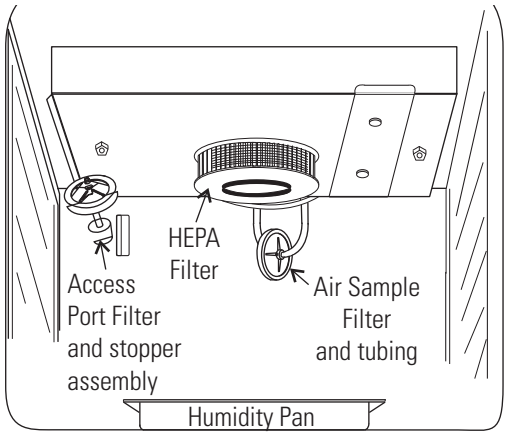

Figure 5-1. Component Locations

2. Wash the air sample filter tubing, shelves, and ducts with disinfectant, then rinse with sterile water. Optionally, the shelves and ducts may be autoclaved.

3. Wash the inner door gasket with disinfectant. This gasket may be removed to be cleaned, or replaced.

4. Wash the cabinet interior with disinfectant, starting at the top and working down. Refer to the disinfectant directions for length of time needed before rinsing. Wash the inner door both inside and out. The cabinet and door must be rinsed with sterile water until the disinfectant has been removed. After the cabinet has been rinsed, spray with 70% alcohol.

5. Install the left and right ducts, inner door gasket, access port filter assembly, and air sample filter and tubing, spraying each with 70% alcohol.

6. Install a new HEPA filter.

7. Install the shelves and spray with 70% alcohol.

Clean Cabinet Exterior

Clean the incubator exterior with a damp sponge or soft, well-wrung cloth and mild detergent dissolved in water. Dry with a soft cloth.

Clean Glass Doors

The chamber glass door and the optional independent inner glass doors may be cleaned using the same disinfectant as used on the incubator interior. It is imperative that they be rinsed with sterile distilled water to remove the disinfectant residue. The doors should then be dried with a soft cloth.

Some precautions in the cleaning and care of the incubator glass doors: Moisture leaches alkaline materials (sodium, Na) from the surface of the glass. Evaporation of the moisture concentrates the alkaline and may produce a white staining or clouding of the glass surface. Cleaning chemicals with a PH above 9 and heat (autoclaving) accelerate the corrosion process. Therefore, it is very important to rinse and dry the glass doors after cleaning. Autoclaving the glass doors should be avoided.

There is no simple method for repairing corroded glass. In most cases, the glass must be replaced.

Clean Humidity Pan

Clean the humidity pan with soap and water and a general-use laboratory disinfectant. Rinse with sterile water and spray with 70% alcohol. The pan may be autoclaved.

HEPA Filter Maintenance

Replace the HEPA filter when the REPLACE HEPA reminder is displayed. The REPLACE HEPA reminder can be set to alarm after a specified time from 1 to 12 months. The reminder default is the factory recommended setting of 6 months. For details, see Section 3.

Replace Power Fuses

To access the only replaceable fuse in the incubator:

1. Turn off the incubator's power switch and unplug the power cord.
2. Remove the two screws from the top of the control panel. Grasp the control panel on each side and pull straight outward.
3. Figure 5-3 shows the location of the fuse. See Table 5-1 following for replacement fuse specifications.
4. Secure the control panel and return the unit to service. If the fuse blows after restoring power to the incubator, contact your local distributor.

Table 5-1. Fuse Replacement Chart

Fuse Voltage	Manufacturer's P/N	Amperage Rating	Rupture Speed	IEC Letter Code
230 VAC	BUSS GMC-0.5 A	500 mA	Time-Lag	T
115 VAC	BUSS GMC-1.0 A	1.0 Amp	Time-Lag	T

Replace Air Sample Filter

1. Connect one end of the air sample filter to the hose barb on the chamber ceiling.
2. Connect the other end of the filter to the metal tubing on the HEPA filter adapter (Figure 5-2).

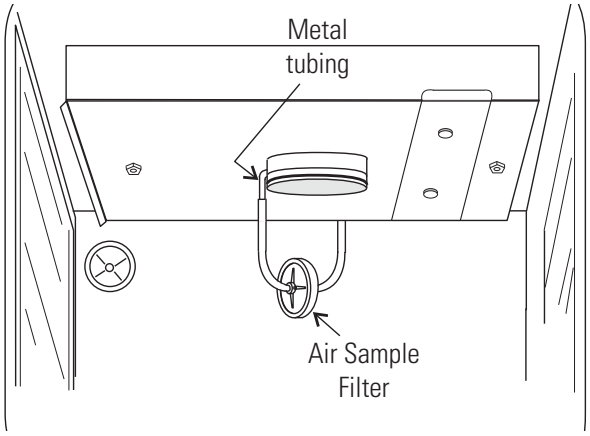

Figure 5-2. Connect to Metal Tubing

Electronics Section

1. Turn off the incubator's power switch and unplug the power cord.
2. Remove the three screws from the back of the cabinet top.
3. Slide the top backward about an inch and lift it off.

Major Components

Refer to Figure 5-3. Some components shown are factory installed options.

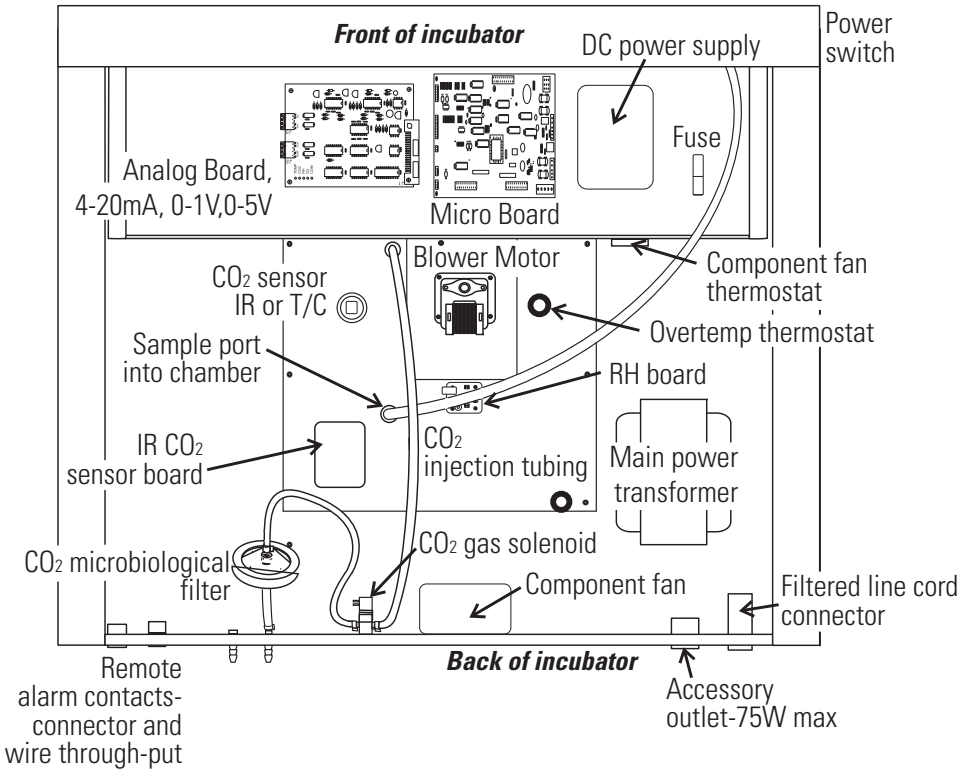

Figure 5-3. Electronics Drawer

Sterilization Cycle

Information You Need to Know Before Starting a Cycle

- The Sterilization Cycle requires approximately 12 hours -
  heat-up (2-4 hours), sterilize (2 hours), and cool down (6-8 hours).
  Additional time is needed to verify the calibration of temperature and CO_2 after the cycle is complete.

- During the Sterilization Cycle, the incubator updates the temperature to the analog output board and the 1535, however CO_2 will be fixed at setpoint and RH will be fixed at RH Low Limit plus 1%.

- A HEPA filter replacement kit (see the spare parts list) should be on hand prior to initiating the Sterilization Cycle.

Information About the Cycle

- Pre-cleaning may be required. In order to avoid odors, stains on the interior, baked-on material, etc., wipe off all visible signs of spills.

- Odor may occur during the Sterilization Cycle and is considered normal.

- The Steri Cycle is not intended to sterilize other items; instruments, etc., from the lab.

- During the cycle, the unit chamber becomes hot enough to melt samples, instruments, dishes, etc., left inside the unit. The items listed below also need to be removed.

  1) HEPA filter
  2) Air sample filter
  3) Access port filter assembly
  4) Water in the humidity pan
  5) Temp/RH recorder probe, if applicable
  6) IR sensor, if applicable

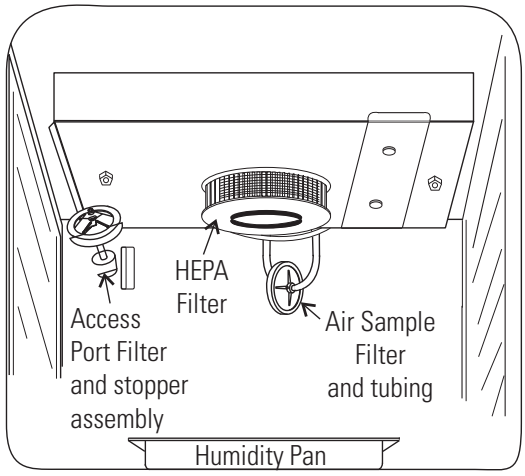

- During the Sterilization Cycle, discoloration of some materials may occur. For example, stainless steel turns a straw color after a period of exposure to high temperatures.
  This is normal.

Checkpoints

What if?	Then
Cycle does not initiate or terminates in mid-cycle	Check for alarms: SYS IN OTEMP, AIR SNSR ERR, TMP CTRL ERR
Units are stacked	A Sterilization Cycle performed on either unit affects performance on second unit. Do not use second unit during Sterilization Cycle. The Sterilization Cycle may be performed on both units simultaneously, with proper electrical connection.
No action is taken within 1 minute, following display prompt	Unit returns to normal operation, SYSTEM OK
Need to cancel cycle in progress	Hold down green cycle initiation button for 3 seconds
Water is not removed from humidity pan during cycle	Steam is produced and may cause burns
Listed components are not removed before initiating cycle	Components cannot withstand the sterilization cycle temperatures and are destroyed
Unit is not powered off before removing the I/R sensor, if applicable	Damage to the sensor may result
Dummy I/R sensor is not installed	The sensor cable cannot withstand sterilization cycle temperatures and is destroyed properly
The outer door is opened during the heat or sterilization phases	An outer door alarm occurs: CLOSE DOOR in the display, plus an audible (cannot be silenced) and visual alarm.
The outer door is open longer than 20 seconds during phases listed above	Cycle is canceled, unit goes to CANCELED COOL PHASE*
The outer door is open during the cool down phase when the temp is 60°C or greater	An outer door alarm occurs
Power interruption during the HEAT PHASE	HEAT PHASE resumes if the chamber temperature was less than 90°C when power was interrupted HEAT PHASE resumes if the chamber temperature was greater than 90°C when power was interrupted, and the temperature dropped less than 1°C CANCELED COOL PHASE* starts if the chamber temp drop is more than 1°C
Power interruption during the STERILIZATION PHASE	HEAT PHASE begins if the chamber temperature has not dropped below 139°C STERILIZATION PHASE starts again when the chamber temperature reaches 140°C CANCELED COOL PHASE* starts if the chamber temp dropped below 139°C

* For further information on CANCELED COOL PHASE, see page 5-12.

Sterilization Cycle

Warning The Sterilization Cycle heats the incubator interior surfaces to 140°C. Contact with any surface inside the outer door during this cycle may result in burns. ▲

1. Empty the water from the humidity pan and place the pan back into the incubator. Remove any samples, instruments, dishes, etc. from the chamber.

2. Press and hold the large white sterilization cycle button on the right side of the unit (Figure 5-4) for approximately 3 seconds until the LED lights.

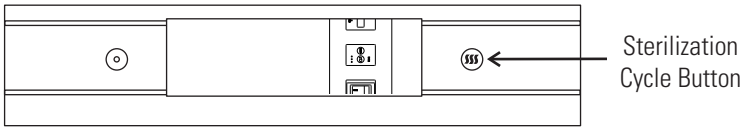

Figure 5-4. Sterilization Button Location

3. ENTER the access code, if applicable. An access code is recommended to prevent accidental cycle initiation.

4. **Pre Sterilization with T/C CO_2 sensor** - The display toggles between "REMOVE HEPAs", "REMOVE WATER" and "PRESS ENTER". If ENTER is not pressed within 1 minute, the display returns to "SYSTEM OK".

5. Remove the HEPA filter, air sample filter and access port filter assembly (Figure 5-5). Tubing can remain in the unit during the sterilization cycle. In addition, remove the temp/RH recorder probe and IR sensor, if applicable. Discard the filters.

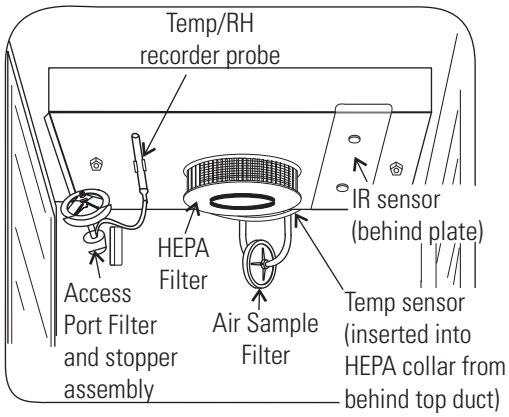

Figure 5-5. Filter Locations

Sterilization Cycle (continued)

Pre Sterilization with IR CO_2 sensor - If an IR sensor is connected, the display toggles between "POWER OFF" and "REMOVE IR". If power is not turned off within 1 minute, the display returns to "SYSTEM OK".

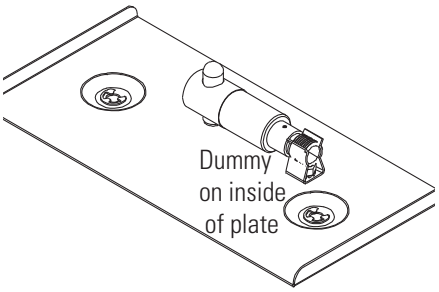

Figure 5-6. Dummy Sensor

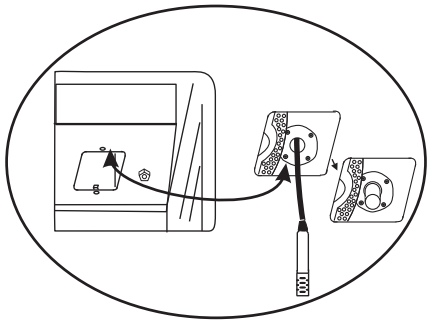

Figure 5-7. IR Sensor with Cable

Note To remove the IR sensor, if applicable, first power the unit off. Then turn the two 1/4-turn fasteners on the top duct until the cover plate is disengaged. Secured on the inside of the plate is a dummy sensor (Figure 5-6). ▲

6. Grip the IR sensor and carefully pull it downward. Unscrew the cable from IR sensor (Figure 5-7). Set the sensor aside. See Step 9 for the IR sensor disinfection procedure. Connect the dummy sensor to the cable. Fit the installed dummy sensor up into the previous sensor location.

   When the power is turned on with the IR sensor removed, the display toggles between "REMOVE HEPAs", "REMOVE WATER", and "PRESS ENTER". If "ENTER" is not pressed within 1 minute, the display toggles between "POWER OFF" and "REPLACE IR". Refer to Figure 5-8. When the unit is powered back on with the IR sensor reinstalled, the display returns to "SYSTEM OK".

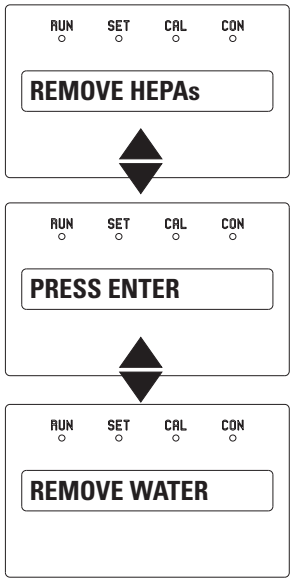

Figure 5-8. Displays with IR Sensor Removed

Sterilization Cycle (continued)

7. After ENTER is pressed, the Heat Phase initiates. The white LED flashes and the display toggles between “STERILIZING” and “HEAT PHASE”. During this period, the HEAT light will be on and the cabinet heats to sterilization temperature.

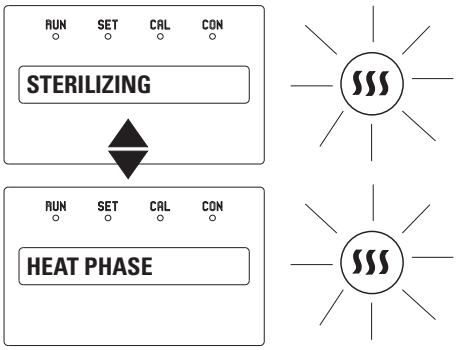

Figure 5-9. Heat Phase

8. When the air temperature in the unit reaches 140.0°C, the Sterilization Phase begins and the display changes to “STERILIZING”.

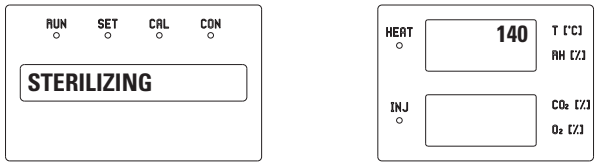

Figure 5-10. Sterilization Phase

9. After approximately 2 hours, a 5-second audible tone sounds, signaling that sterilization is complete. The Cool Phase begins. The display toggles between “STERILIZING” and “COOL PHASE”.

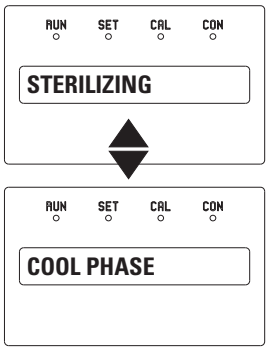

Figure 5-11. Cool Phase

Sterilization Cycle (continued)

10. **Completed Sterilization Cycle with T/C CO_2 sensor** - When the temperature cools down to the original set operating temperature or 30°C, whichever is higher, the display toggles between "CYC COMPLETE", "REPL HEPAs" and "PRESS ENTER". The white LED is lighted but no longer flashes.

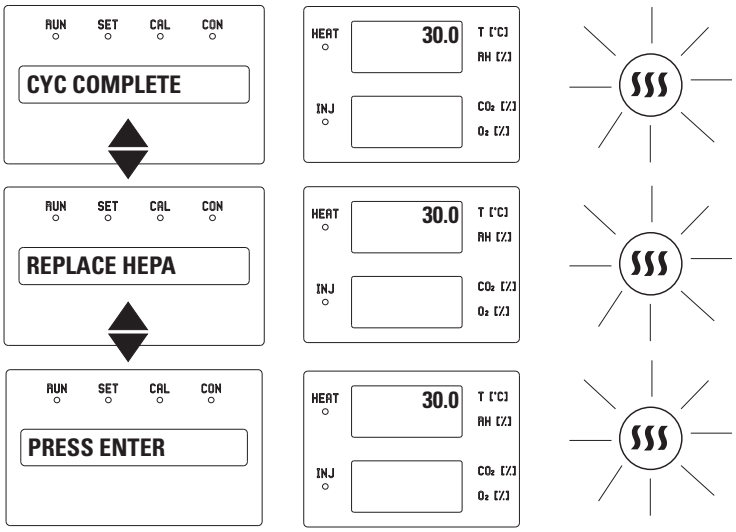

Figure 5-12. IR Sensor Reinstalled

Completed Sterilization Cycle with IR CO_2 sensor - When the temperature cools down to the original set operating temperature or 30°C, whichever is higher, the display toggles between "CYC COMPLETE", "POWER OFF" and "REPLACE IR". The white LED is lighted but no longer flashes.

11. Clean the IR sensor with either isopropanol or Lysol No-Rinse Sanitizer. When using isopropanol, simply spray the sensor (do not saturate) and allow to dry. With Lysol, spray the sensor (do not saturate) and allow to sit for a couple of minutes. Wipe dry with a clean, soft cloth.

Do not saturate the sensor or immerse the sensor in a cleaner.

Power the unit off, open the chamber, and remove the IR plate. Pull down on the dummy, unscrew the cable from the top of the dummy and press the dummy into the clip on the plate. See Figure 5-12. Screw the cable onto the top of the IR sensor. The cable is keyed and can only be inserted one way. Reinstall the sensor by pushing it as far as it will go into the hole.

After the unit is powered back on with the IR sensor reinstalled, the display toggles between "CYC COMPLETE", "REPL HEPAs" and "PRESS ENTER".

Sterilization Cycle (continued)

12. Open the chamber and install a new HEPA filter, air sample filter and access port filter assembly. Press ENTER.

13. When ENTER is pressed, the LED goes out, the display returns to "SYSTEM OK" and the HEPA filter replacement timer is reset.

14. Fill the humidity pan with 3 liters of sterile distilled water with the recommended purity range (See Section 1).

15. Allow to stabilize for at least 12 hours at the required temperature and CO_2 level. It is recommended that the temperature and CO_2 calibrations be verified periodically during the first week of returning the unit to service.

Caution The high temperature sterilization cycle may cause the T/C CO_2 sensor output to change significantly. (This is normal and does not indicate damage to the sensor). Therefore it is essential that the CO_2 calibration is verified before returning the unit to service. ▲

If an independent instrument is not available to verify calibration, the following procedure may be performed. After the Sterilization Cycle and before CO_2 is allowed to enter the cabinet;

1) Fill and install the humidity pan.

2) Allow to stabilize at the desired operating temperature for at least 12 hours.

3) Calibrate the display to 0.0%.

Note If the Cool Phase is canceled, the display toggles between "CYC CANCELED" and "COOL PHASE". ▲

- With T/C CO_2 sensor - When the temperature cools down to the original set operating temperature or 30°C, whichever is higher, the display toggles between "CYC CANCELED", "REPL HEPAs" and "PRESS ENTER". The white LED is lighted but no longer flashes.

- With IR CO_2 sensor - When the temperature cools down to the original set operating temperature or 30°C, whichever is higher, the display toggles between "CYC CANCELED", "POWER OFF" and "REPLACE IR". The white LED is lighted but no longer flashes. After the unit is powered back on with the IR sensor reinstalled, the display toggles between "CYC CANCELED", "REPL HEPAs" and "PRESS ENTER".

Section 6 Factory Options

A description of the factory option connections to external equipment follows.

Remote Alarms

A set of relay contacts is provided to monitor alarms through an RJ11 telephone style connector on the back of the cabinet. Refer to Figure 6-5 for the location of the alarm connector. The 12-foot telephone cord (P/N 190388) and RJ11-to-screw terminal conversion box (P/N 190392) are available through your local distributor.

The remote alarm provides a NO (normally open) output, an NC (normally closed) output and COM (common). Refer to Figure 6-1.

The contacts will trip on a power outage or an overtemperature condition. The contacts may also be programmed to trip or not trip on temperature alarms, CO_2 alarms and RH alarms. See Section 3, Configuration mode.

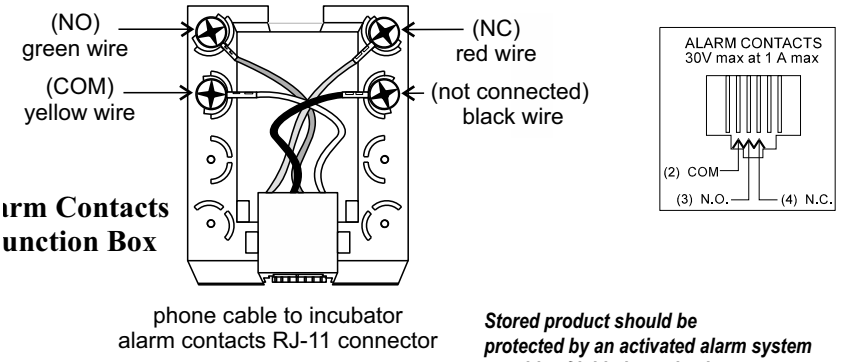

Figure 6-1. Remote Alarm Contacts

Humidity Readout

Series 8000DH incubators are equipped with a humidity sensor to monitor the relative humidity inside the chamber. The sensor is located on the chamber ceiling and provides a signal that is displayed in 1% increments on the control panel. The humidity readout can display continuously, or toggle with the temperature readout. In addition, a low alarm limit can be set on the humidity readout to detect when the humidity pan runs dry. Refer to Section 3, Configuration.

The sensor is capable of measuring relative humidity from 10% to 100% with an accuracy of ±5% above 90%. See Section 2, Calibration, for details on calibrating the humidity readout.

Factors which may affect humidity levels in the chamber are: the water level in the humidity pan, frequency of door openings, and the fact that the humidity pan is located on the bottom of the chamber versus on a shelf.

Caution Incubators equipped with a T/C (thermal conductivity) CO_2 sensor rely on a constant level of relative humidity to accurately measure and control the CO_2 concentration in the incubator. ▲

Section 7 Specifications

**Specifications are based on a nominal voltage of 115 V or 230 V in ambients of 22°C to 25°C.*

Temperature

Control . . . . .±0.1°C Microprocessor PID Control
Setpoint . . . . . .Digital - Touch pad, 0.1°C
Range . . . . . .+5°C above ambient to 50°C
Uniformity . . . . . .±0.3°C @ +37°C
Tracking alarm..User programmable (low) indicator
Overtemp . . Tracking, user programmable, action, and indicator
Display . . . . . .Digital, LED, 0.1°C increments

Over Temperature Protection

Type . . . Extreme temperature safety, action, and indicator
Sensor . . Thermostat, independent of temp control system
Indicator . Message center, audible and visual alarms

Relative Humidity

Control . . . . .Humidity pan - natural vaporization
Humidity w/ pan . . . . . .95% RH at 37°C
Display . . . . . .Optional in 1% increments
Alarm . . . . . .Low RH with optional RH monitor

CO_2

Control . . . . .±0.1% microprocessor PID control
Sensor . . . . . .T/C or IR
Readability 0.1%
Range . . . . . .0 to 20%
Inlet pressure . . . .15 psig (1 bar), ±5 psig (0.3 bar)
Display . . . . . .Digital LED, 0.1% increments

Shelves

Dimensions . . . . . .18.5” x 18.5” (47 cm x 47 cm)
Construction . . Stainless steel (belt sanded, both sides)
Surface area . . . . .2.4 sq. ft. (0.22 sq. m.) per shelf
Max. per chamber . . . . . .38.4 sq. ft (3.6 sq. m.)
Loading . . . 35 lbs (16 kg) slide in and out, 50 lbs (23 kg) stationary
Standard . . . . . .3 (ships with unit)
Maximum 16

Construction

Interior volume . . . . . .6.5 cu. ft. (184 liter)
Interior . . . . . .Type 304 stainless steel shiny finish
Exterior . . . . . .18 gauge cold roll steel
Outer door gasket . .Four-sided molded, magnetic Santoprene
Inner door gasket . . . . . .Bulb, silicone
Insulation . . . . . .Mineral wool

Fittings

Access port . .1-1/4” (32 mm) removable silicone plug
CO_2 inlet . . . . . .1/4” (6.4 mm) barbed
Sample port . . . . . .Front mounted barbed

Electrical

115 Volt models
. . . . . .115 VAC, 50/60 Hz, 1 PH, 9.6 FLA
(Operating range 90-125 VAC)
230 Volt models
. . . . . .230 VAC, 50/60 Hz, 1 PH, 4.4 FLA
(Operating Range 180-250 VAC)
Power switch/circuit breaker . . . 2 Pole, 12.0 Amp
Accessory outlet . . .Voltage equal to the cabinet input.
75 Watts maximum, 0.5 ma leakage current
Alarm contacts . . Deviation of temperature, CO_2, power, NO and NC

Dimensions

Exterior . . . . . .26.1” W x 39.5” H x 25.0” F-B . . . . . (66.3 cm x 100.3 cm x 63.5 cm)

Interior . . . . . .21.3” W x 26.8” H x 20.0” F-B . . . . . (54.0 cm x 68.1 cm x 50.8 cm)

Weight

Net . . . . . .260 lbs (118 kg)

Net shipping . . . . . .315 lbs (143 kg)

Certifications

Declaration of Conformity available on request

Safety Specifications

Indoor Use Only

Altitude . . . . . .Up to 2,000 meters

Temperature . . . . . .5°C to 40°C

Humidity . . . . . Maximum 80% RH for temps up to 31°C, ...decreasing linearly to 50% RH at 40°C non-condensing

Mains supply voltage fluctuations not to exceed ±10% of nominal voltage

Installation Category II[1]

Pollution Degree 2[2]

Class of Equipment 1

---

1 Installation category (overvoltage category) defines the level of transient overvoltage which the instrument is designed to withstand safely. It depends on the nature of the electricity supply and its overvoltage protection means. For example, in CAT II which is the category used for instruments in installations supplied from a supply comparable to public mains such as hospital and research laboratories and most industrial laboratories, the expected transient overvoltage is 2500 V for a 230 V supply and 1500 V for a 120 V supply.

2 Pollution Degree describes the amount of conductive pollution present in the operating environment. Pollution degree 2 assumes that normally only non-conductive pollution such as dust occurs with the exception of occasional conductivity caused by condensation.

Section 8 Spare Parts

Part Number . . . . . .Description
190699 . . . . . .Removable feather gasket
190670 . . . . . .Duct sheet and shelf channel kit
224175 . . . . . .Stainless steel shelf
190884 . . . . . .Stainless steel shelf and channels
191650 . . . . . .Micro board, (main control)
230135 . . Fuse, 1 A, TD, 5 x 20 mm (accessory outlet, 115 V)
230120 . . .Fuse, 0.5 A TD, 5 x 20 mm (accessory outlet 230 V)
430109 . . . . . .Cordset, 10 A, 250 V
156117 . . . . . .Motor, 2-pole, 115 VAC, 50/60 Hz
190793 . . . . . .Display board
290184 . . . . . .Probe, 2252 Ohm/25°C, 1/8 x2
130077 . . . . . .Stopper with 3/8" hole
290168 . . Thermal conductivity (T/C) type CO2 sensor
231204 . . . . . .Infrared (IR) type CO2 sensor
2270112 . . . . . .CO2 valve kit with assorted fittings
965010 . . . . . .CO2 gas regulator
3166242 . . . . . .Gas shuttle switch
3050 . . . . . .External gas guard
950316 . . . . . .Wall clamp for CO2 bottle
231203 . . RH sensor assembly (P/N 1900091 RH display option)
230180 . . . . .12 A, DPDT circuit breaker switch (power)
400119 . . . . . .Switcher, 40 W, 12, 5, -12 V
196018 . . . . .34 position control to display ribbon cable
2270111 . . . . . .Inner door switch
360283 . . . . . .Outer door switch
360236 . . . . . .Sterilization initiation switch
100115 . . . . . .Blower wheel
190985 . . . . . .Access port filter assembly
760210 . . . . . .Disposable in-line filters (10 filters)
770001 . . Disposable filter, 99.97% (CO2 line, air sample)
760175 . . . . . .HEPA filter, 5.5" diameter
760209 . . . . . .HEPA value pack (4 filters)
1900067 . . . . . .HEPA filter replacement kit
190650 . . . . . .Independent inner door kit
190666 . . . . . .Right hand door swing
1900063 . . . . . .Roller base
140387 . . . . . .Overlay
50109579 . AquaTec water cleaning cell 4-pack for water reservoirs, pans, bottles)
1900346 . . . . . .Display control board
129060 . . . . . .Spring (1) for updated duct sheets
114021 . . . . . .Grommet (1) for updated duct sheets
1900567 . . . . . .Exterior door assembly SRO

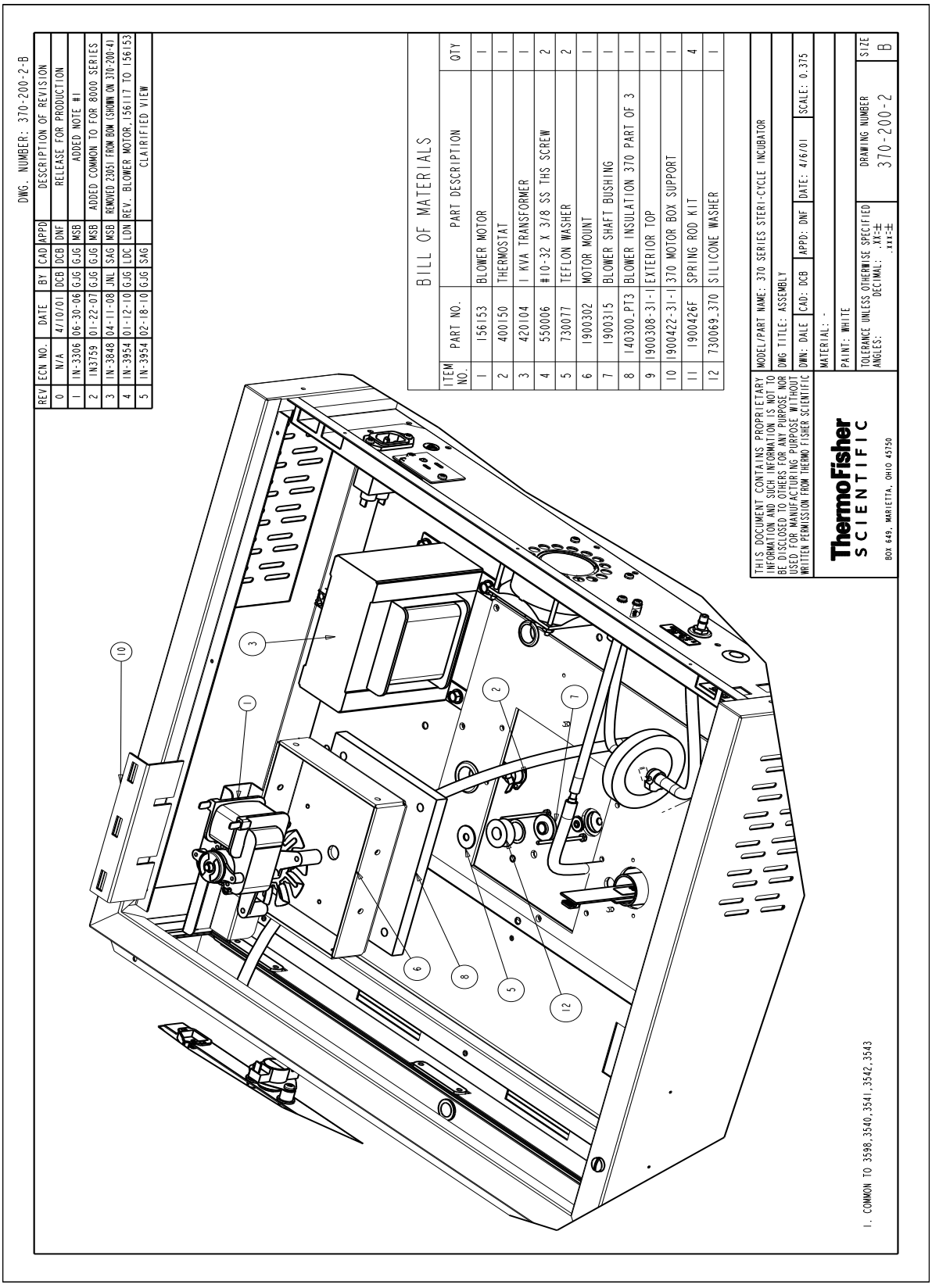
DWG. NUMBER: 370-200-2-B
REV | ECN NO. | DATE | BY | CAD | APPD | DESCRIPTION OF REVISION
0 | N/A | 4/10/01 | DCB | DCB | DNF | RELEASE FOR PRODUCTION
1 | IN-3306 | 06-30-06 | GJG | GJG | MSB | ADDED NOTE #1
2 | IN3759 | 01-22-07 | GJG | GJG | MSB | ADDED COMMON TO FOR 8000 SERIES
3 | IN-3848 | 04-11-08 | JNL | SAG | MSB | REMOVED 23051 FROM BOM (SHOWN ON 370-200-4)
4 | IN-3954 | 01-12-10 | GJG | LDC | LDN | REV. BLOWER MOTOR, 156117 TO 156153
5 | IN-3954 | 02-18-10 | GJG | SAG | | CLARIFIED VIEW
BILL OF MATERIALS
ITEM NO. | PART NO. | PART DESCRIPTION | QTY
1 | 156153 | BLOWER MOTOR | 1
2 | 400150 | THERMOSTAT | 1
3 | 420104 | 1 KVA TRANSFORMER | 1
4 | 550006 | #10-32 X 3/8 SS THS SCREW | 2
5 | 730077 | TEFLON WASHER | 2
6 | 1900302 | MOTOR MOUNT | 1
7 | 1900315 | BLOWER SHAFT BUSHING | 1
8 | 140300_PT3 | BLOWER INSULATION 370 PART OF 3 | 1
9 | 1900308-31-1 | EXTERIOR TOP | 1
10 | 1900422-31-1 | 370 MOTOR BOX SUPPORT | 1
11 | 1900426F | SPRING ROD KIT | 4
12 | 730069_370 | SILICONE WASHER | 1
1. COMMON TO 3598,3540,3541,3542,3543
THIS DOCUMENT CONTAINS PROPRIETARY INFORMATION AND SUCH INFORMATION IS NOT TO BE DISCLOSED TO OTHERS FOR ANY PURPOSE NOR USED FOR MANUFACTURING PURPOSE WITHOUT WRITTEN PERMISSION FROM THERMO FISHER SCIENTIFIC
MODEL/PART NAME: 370 SERIES STERI-CYCLE INCUBATOR
DWG TITLE: ASSEMBLY
DWN: DALE | CAD: DCB | APPD: DNF | DATE: 4/6/01 | SCALE: 0.375
MATERIAL: -
PAINT: WHITE
TOLERANCE UNLESS OTHERWISE SPECIFIED
ANGLES: DECIMAL: .XX=± .XXX=±
DRAWING NUMBER 370-200-2
SIZE B
ThermoFisher SCIENTIFIC
BOX 649, MARIETTA, OHIO 45750

DWG. NUMBER: 370-200-3-B

REV	ECN NO.	DATE	BY	CAD	APPD	DESCRIPTION OF REVISION
0	N/A	4/11/01	DCB	DCB	DNF	RELEASE FOR PRODUCTION
1	IN-2942	05-14-01	DCB	KDG	LDN	REMOVED TOP ROW OF TABS FROM DUCT SHEET
2	IN-3124	07-30-03	JNL	KDG	LDN	CHANGED 290137 PROBE TO 290184
3	IN-3306	06-30-06	GJG	GJG	MSB	ADDED NOTE #1
4	IN-3759	01-22-07	GJG	GJG	LDN	ADDED COMMON TO FOR 8000 SERIES
5	IN-3954	02-18-10	GJG	SAG		ADDED 1900426

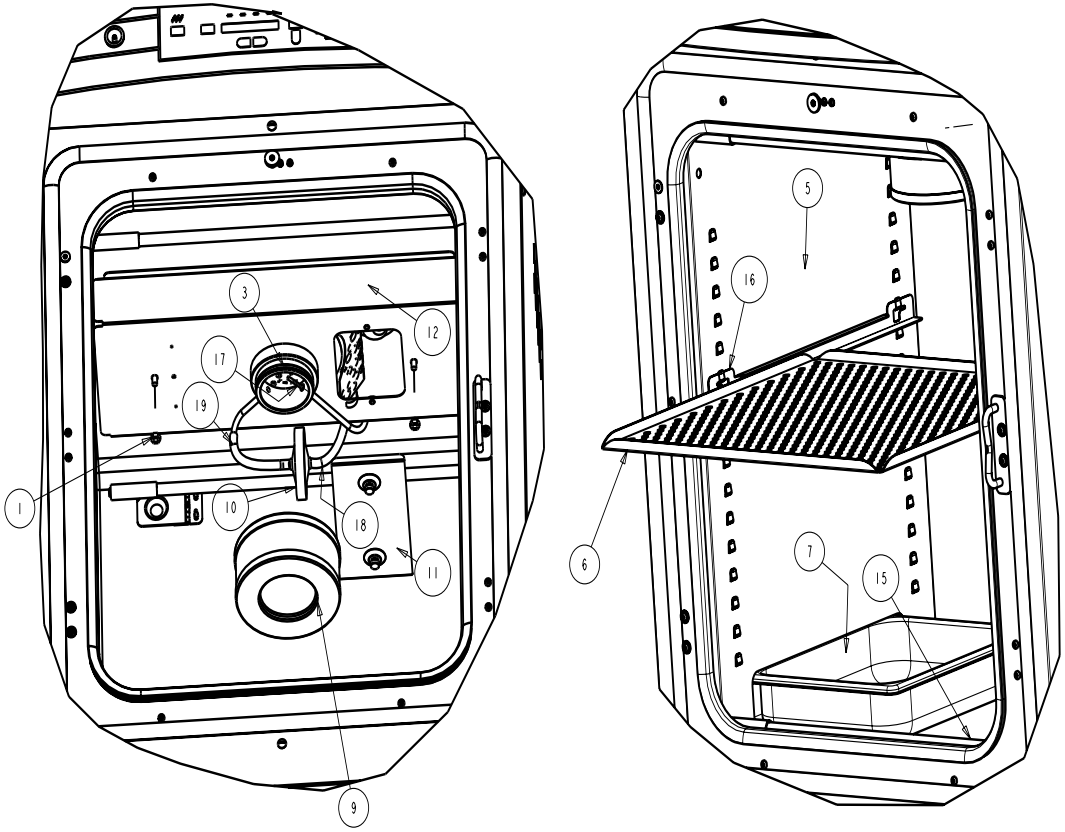

BILL OF MATERIALS

ITEM NO.	PART NO.	PART DESCRIPTION (4)	QTY
1	23004	1/4-20 SS HEX NUT	2
2	23010	#8-32 SS HEX NUT	4
3	101013	3" SILICONE O-RING	1
4	156153	BLOWER MOTOR	1
5	190723	MODULAR W/J DUCT SHEET (8)	2
6	224175	INC. SHELF - 2B BRUSHED BACK	1
7	237016	HUMIDITY PAN	1
8	550006	#10-32 X 3/8 SS THS SCREW	2
9	760175	5.500" HEPIA FILTER	1
10	770001	DISPOSIBLE HEPIA FILTER 1/4	1
11	1900097	ACCESS PLATE	1
12	1900311	370 SERIES TOP DUCT SUB-ASSEMBLY	1
13	1900308-31-1	EXTERIOR TOP	1
14	1900422-31-1	370 MOTOR BOX SUPPORT	1
15	1900426F	SPRING ROD KIT	4
16	190664-31-1	SHELF CHANNEL	2
17	290184	TEMPERATURE SENSOR	1
18	FLTRD_AIR_2	244020 SILICONE TUBE 6"	1
19	FLTRD_AIR_3	244020 SILICONE TUBE 5"	1

1. COMMON TO 3598,3540,3541,3542,3543

THIS DOCUMENT CONTAINS PROPRIETARY INFORMATION AND SUCH INFORMATION IS NOT TO BE DISCLOSED TO OTHERS FOR ANY PURPOSE NOR USED FOR MANUFACTURING PURPOSE WITHOUT WRITTEN PERMISSION FROM THERMO FISHER SCIENTIFIC

MODEL/PART NAME: 370 SERIES STERI-CYCLE INCUBATOR

DWG TITLE: ASSEMBLY

DWN: DALE | CAD: DCB | APPD: DNF | DATE: 4/6/01 | SCALE: 0.200

MATERIAL: -

PAINT: WHITE

TOLERANCE UNLESS OTHERWISE SPECIFIED
ANGLES: DECIMAL: .XX=±
.XXX=±

DRAWING NUMBER 370-200-3 | SIZE B

ThermoFisher SCIENTIFIC
BOX 649, MARIETTA, OHIO 45750

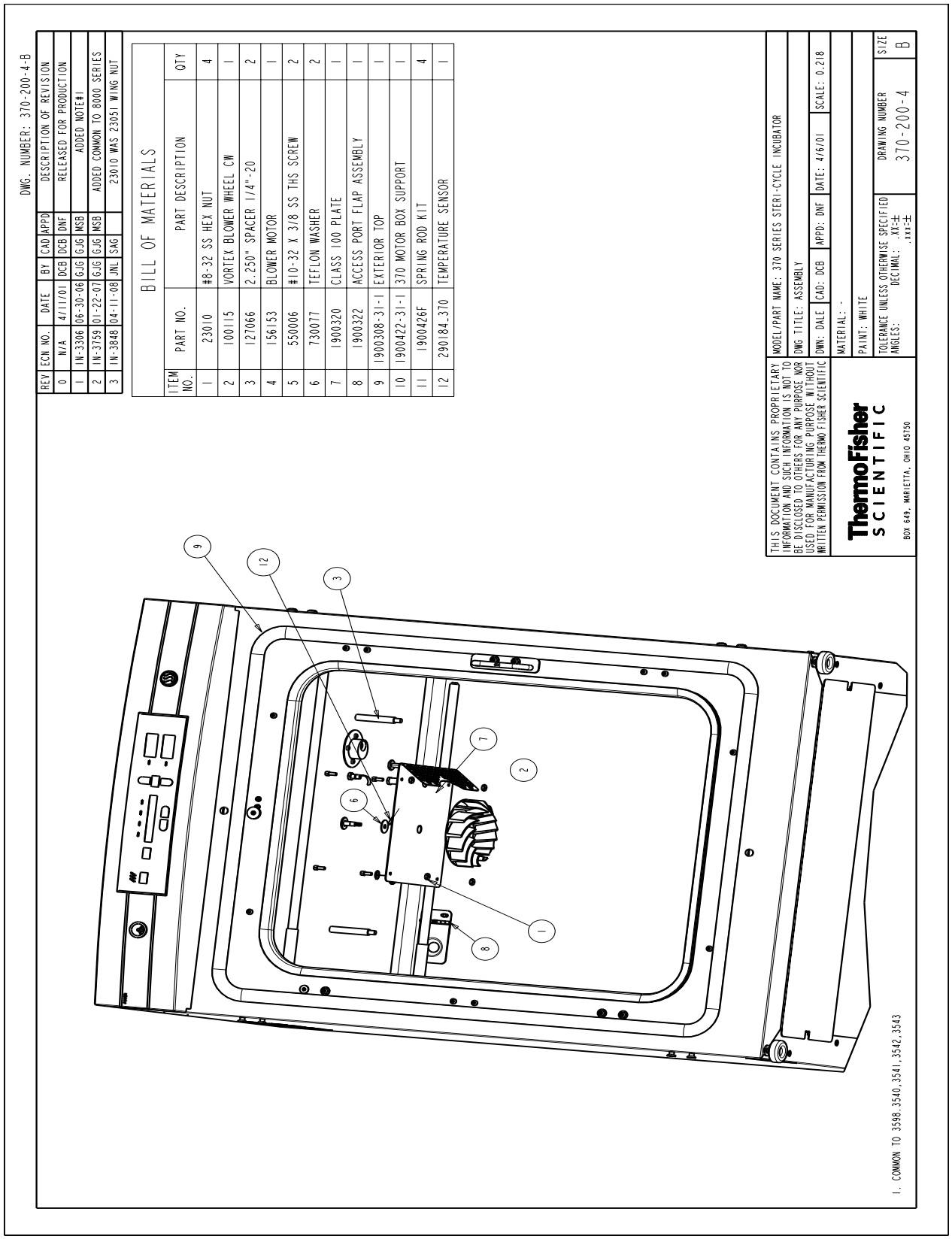
DWG. NUMBER: 370-200-4-B
REV | ECN NO. | DATE | BY | CAD | APPD | DESCRIPTION OF REVISION
0 | N/A | 4/11/01 | DCB | DCB | DNF | RELEASED FOR PRODUCTION
1 | IN-3306 | 06-30-06 | GJG | GJG | MSB | ADDED NOTE #1
2 | IN-3759 | 01-22-07 | GJG | GJG | MSB | ADDED COMMON TO 8000 SERIES
3 | IN-3848 | 04-11-08 | JNL | SAG | | 23010 WAS 23051 WING NUT
BILL OF MATERIALS
ITEM NO. | PART NO. | PART DESCRIPTION | QTY
1 | 23010 | #8-32 SS HEX NUT | 4
2 | 100115 | VORTEX BLOWER WHEEL CW | 1
3 | 127066 | 2.250" SPACER 1/4"-20 | 2
4 | 156153 | BLOWER MOTOR | 1
5 | 550006 | #10-32 X 3/8 SS THS SCREW | 2
6 | 730077 | TEFLON WASHER | 2
7 | 1900320 | CLASS 100 PLATE | 1
8 | 1900322 | ACCESS PORT FLAP ASSEMBLY | 1
9 | 1900308-31-1 | EXTERIOR TOP | 1
10 | 1900422-31-1 | 370 MOTOR BOX SUPPORT | 1
11 | 1900426F | SPRING ROD KIT | 4
12 | 290184-370 | TEMPERATURE SENSOR | 1
THIS DOCUMENT CONTAINS PROPRIETARY INFORMATION AND SUCH INFORMATION IS NOT TO BE DISCLOSED TO OTHERS FOR ANY PURPOSE NOR USED FOR MANUFACTURING PURPOSE WITHOUT WRITTEN PERMISSION FROM THERMO FISHER SCIENTIFIC
ThermoFisher SCIENTIFIC
BOX 649, MARIETTA, OHIO 45750
MODEL/PART NAME: 370 SERIES STERI-CYCLE INCUBATOR
DWG TITLE: ASSEMBLY
DWN: DALE | CAD: DCB | APPD: DNF | DATE: 4/6/01 | SCALE: 0.218
MATERIAL: -
PAINT: WHITE
TOLERANCE UNLESS OTHERWISE SPECIFIED
ANGLES: DECIMAL: .XX=± .XXX=±
DRAWING NUMBER 370-200-4
SIZE B
1. COMMON TO 3598,3540,3541,3542,3543

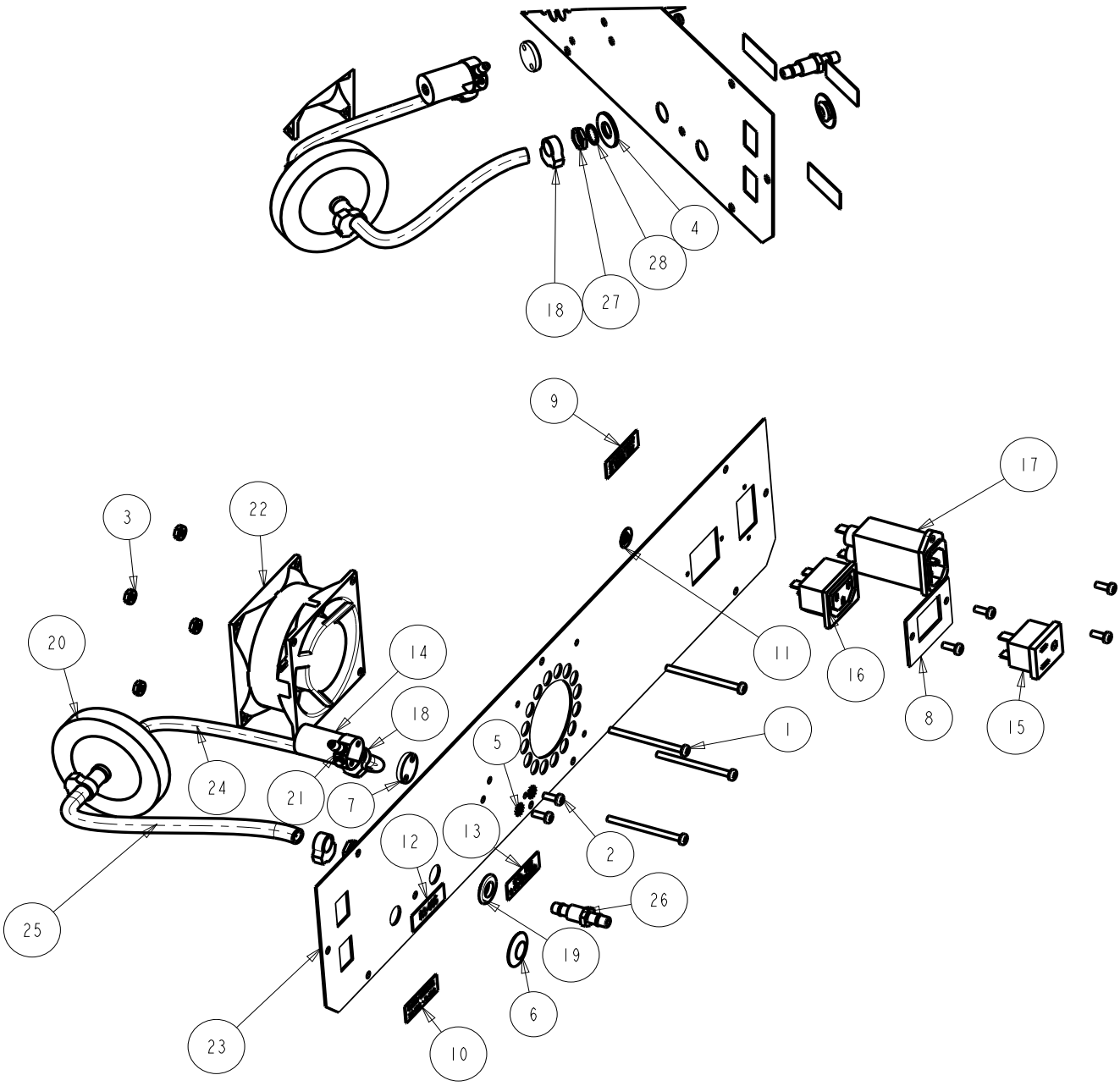

1. COMMON TO 3598,3540,3541,3542,3543

370-200-5-B Rev. 10
PAGE 1 of 2

370 BACK PANEL ASSEMBLY

BILL OF MATERIALS			
ITEM NO.	PART NO.	PART DESCRIPTION	QTY
1	22011	#6-32 x 2 SS PHP SCREW	4
2	22049	#6-32 X 3/8 SS PHP SCREW	6
3	23001	#6-32 ZP LKWASH HEX NUT	4
4	23024	3/8" SS FLAT WASHER	1
5	23058	#6 SS EXT TOOTH LOCKWASHER	2
6	34014	1/2" SNAP-IN HOLE PLUG (BLACK)	1
7	190222	VALVE SPACER	1
8	190994	ACCESSORY OUTLET MOUNT (370/380 ONLY)	1
9	220259	ACCESS OULET LABEL	1
10	220381	ALARM CONTACT LABEL	1
11	220490	REFER TO MANUAL LABEL	1
12	220565	RS-485 LABEL	1
13	220566	CO2 #1 LABEL	1
14	250139	SOLENOID VALVE 12V	1
15	460024	SNAP-IN OUTLET, WHITE (370/380 ONLY)	1
16	460138	POWER OUTLET 371, 381 ONLY	1
17	460180	POWER ENTRY/RFI LINE FILTER	1
18	600034	SNAPPER CLAMP .375	4
19	730044	SHOULDER WASHER .375" ID	1
20	770001	DISPOSIBLE HEPIA FILTER 1/4	1
21	840045	1/4 HOSE X 10-32 ADAPTER	2
22	900135	3.15" SQUARE FAN	1
23	1900313	BACK PANEL	1
24	370-CO2-INLET-2	950013 VINYL TUBE 1/4" ID, 8"	1
25	370_CO2_INLET_1	950013 VINYL TUBE 1/4" ID, 5"	1
26	840020_FTG	.250 BULKHEAD FITTING	1
27	840020_NUT	.375 NUT BLKHD FITTING	1
28	840020_WSHR	.375 IT WASHER BLKHD FTG	1

370-200-5-B Rev. 10
PAGE 2 of 2

370 BACK PANEL ASSEMBLY

DWG. NUMBER: 370-200-6-B

REV	ECN NO.	DATE	BY	CAD	APPD	DESCRIPTION OF REVISION
0	N/A	3/28/01	DCB	DCB	DNF	RELEASED FOR PRODUCTION
1	IN-2994	10-25-01	WCW	PDK	LDN	CHG. FROM 22130 & 23029 TO 590032
2	IN-3048	09-25-02	GJG	KDG	LDN	ADDED (4) 515084 SPACERS
3	IN-3306	06-30-06	GJG	GJG	LDN	ADDED NOTE #1
4	IN-3758	01-04-07	WCW	KDG	LDN	REMOVED (4) 610055 CLIP NUTS
5	IN-3759	01-22-07	GJG	GJG		ADDED COMMON TO 8000 SERIES

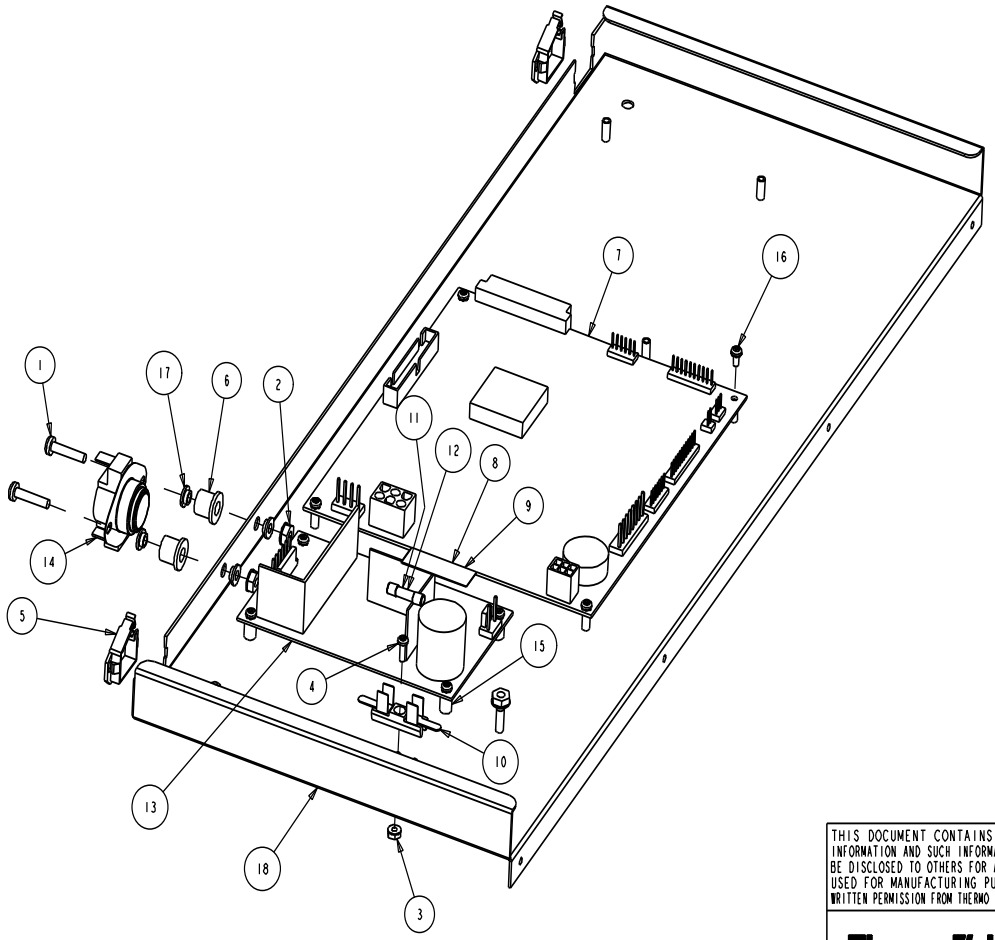

1. COMMON TO 3598,3540,3541,3542,3543

BILL OF MATERIALS

ITEM NO.	PART NO.	PART DESCRIPTION	QTY
1	22015	#8-32 X 3/4 SS PHP SCREW	2
2	23002	#8-32 ZP LKWASH HEX NUT	3
3	23006	#4-40 ZP LKWASH HEX NUT	1
4	59007	#4-40 X 3/8 SS PHP SCREW	1
5	111037	NYLON WIRE SADDLE	2
6	120048	NYLON BEARING 1/4' X 7/16'	2
7	191650	370 SERIES INCUBATOR MICRO BOARD	1
8	220359	1 AMP FUSE LABEL	1
9	220488	.5 AMP FUSE	1
10	230105	FUSE BLOCK 5 X 22 MM	1
11	230120	FUSE_.5A_5X22MM	1
12	230135	FUSE_1A_5X22MM	1
13	400119	SWITCHER	1
14	400151	THERMOSTAT 160 F	1
15	515084	1/4 DIA. X 3/8L SS SPACER	4
16	590032	#4-40 X 1/4 SS PHP EXT SEMS SCREW	8
17	730058	NYLON SHOULDER WASHER	4
18	1900312-15-1	COMPONENT TRAY SUB-ASSEMBLY	1

THIS DOCUMENT CONTAINS PROPRIETARY INFORMATION AND SUCH INFORMATION IS NOT TO BE DISCLOSED TO OTHERS FOR ANY PURPOSE NOR USED FOR MANUFACTURING PURPOSE WITHOUT WRITTEN PERMISSION FROM THERMO FISHER SCIENTIFIC

MODEL/PART NAME: 370 SERIES INCUBATOR

DWG TITLE: CONTROL PANEL TRAY ASSY

DWN: DALE | CAD: DCB | APPD: LDN | DATE: 3/28/01 | SCALE: 0.500

MATERIAL: -

PAINT: N/A

ThermoFisher SCIENTIFIC

BOX 649, MARIETTA, OHIO 45750

TOLERANCE UNLESS OTHERWISE SPECIFIED
ANGLES: DECIMAL: .XX=±
.XXX=±

DRAWING NUMBER 370-200-6

SIZE B

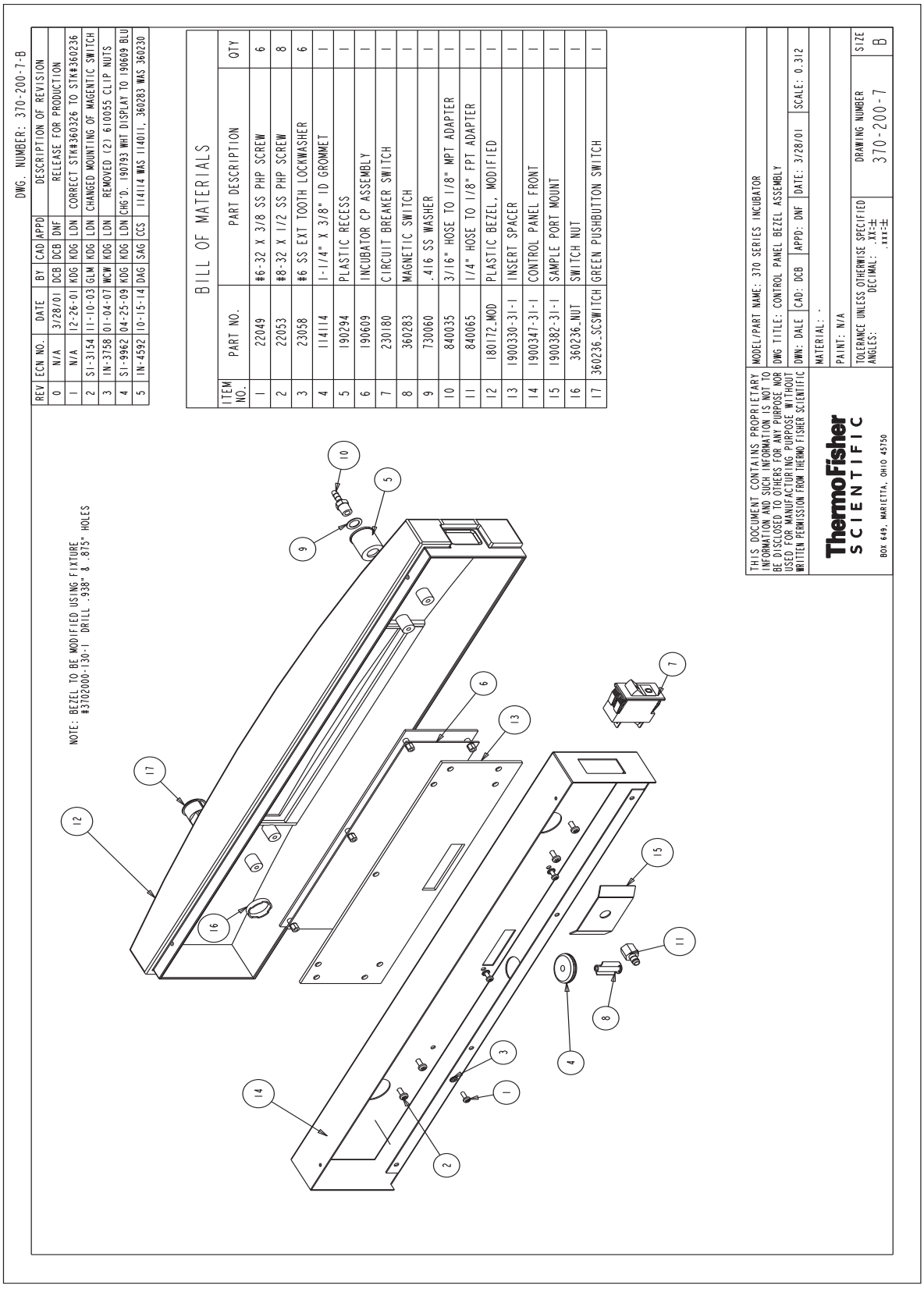
DWG. NUMBER: 370-200-7-B
REV | ECN NO. | DATE | BY | CAD | APPD | DESCRIPTION OF REVISION
0 | N/A | 3/28/01 | DCB | DCB | DNF | RELEASE FOR PRODUCTION
1 | N/A | 12-26-01 | KDG | KDG | LDN | CORRECT STK#360326 TO STK#360236
2 | SI-3154 | 11-10-03 | GLW | KDG | LDN | CHANGED MOUNTING OF MAGENTIC SWITCH
3 | IN-3758 | 01-04-07 | WCW | KDG | LDN | REMOVED (2) 6100S5 CLIP NUTS
4 | SI-9962 | 04-25-09 | KDG | KDG | LDN | CHG'D. 190793 WHT DISPLAY TO 190609 BLU
5 | IN-4592 | 10-15-14 | DAG | SAG | CCS | 114114 WAS 114011, 360283 WAS 360230
BILL OF MATERIALS
ITEM NO. | PART NO. | PART DESCRIPTION | QTY
1 | 22049 | #6-32 X 3/8 SS PHP SCREW | 6
2 | 22053 | #8-32 X 1/2 SS PHP SCREW | 8
3 | 23058 | #6 SS EXT TOOTH LOCKWASHER | 6
4 | 114114 | 1-1/4" X 3/8" ID GROMMET | 1
5 | 190294 | PLASTIC RECESS | 1
6 | 190609 | INCUBATOR CP ASSEMBLY | 1
7 | 230180 | CIRCUIT BREAKER SWITCH | 1
8 | 360283 | MAGNETIC SWITCH | 1
9 | 730060 | .416 SS WASHER | 1
10 | 840035 | 3/16" HOSE TO 1/8" MPT ADAPTER | 1
11 | 840065 | 1/4" HOSE TO 1/8" FPT ADAPTER | 1
12 | 180172-MOD | PLASTIC BEZEL, MODIFIED | 1
13 | 1900330-31-1 | INSERT SPACER | 1
14 | 1900347-31-1 | CONTROL PANEL FRONT | 1
15 | 1900382-31-1 | SAMPLE PORT MOUNT | 1
16 | 360236.NUT | SWITCH NUT | 1
17 | 360236.SCSWITCH | GREEN PUSHBUTTON SWITCH | 1
NOTE: BEZEL TO BE MODIFIED USING FIXTURE #3702000-130-1 DRILL .938" & .875" HOLES
THIS DOCUMENT CONTAINS PROPRIETARY INFORMATION AND SUCH INFORMATION IS NOT TO BE DISCLOSED TO OTHERS FOR ANY PURPOSE NOR USED FOR MANUFACTURING PURPOSE WITHOUT WRITTEN PERMISSION FROM THERMO FISHER SCIENTIFIC
MODEL/PART NAME: 370 SERIES INCUBATOR
DWG TITLE: CONTROL PANEL BEZEL ASSEMBLY
DWN: DALE | CAD: DCB | APPD: DNF | DATE: 3/28/01 | SCALE: 0.312
MATERIAL: -
PAINT: N/A
ThermoFisher SCIENTIFIC
BOX 649, MARIETTA, OHIO 45750
TOLERANCE UNLESS OTHERWISE SPECIFIED
ANGLES:
DECIMAL: .XX=±
.XXX=±
DRAWING NUMBER
370-200-7
SIZE
B

DWG. NUMBER: 370-200-8-B

REV	ECN NO.	DATE	BY	CAD	APPD	DESCRIPTION OF REVISION
0	N/A	04-24-01	DCB	DCB	LDN	RELEASED FOR PRODUCTION
1	IN-2915	07-06-01	JGL	KDG	LDN	ADDED 1900118 RING & NUTS TO TC SENSOR
2	IN-2967	09-27-01	JGL	KDG	LDN	TC SENSOR, ADDED 1900132 HEATER PLATE
3	IN-3306	06-30-06	GJG	GJG	MSB	ADDED NOTE #1
4	IN-3759	01-22-07	GJG	GJG		ADDED COMMON TO 8000 SERIES

BILL OF MATERIALS

ITEM NO.	PART NO.	PART DESCRIPTION	QTY
1	22127	6-32 x1.250 SS PHP SCREW	4
2	23001	#6-32 ZP LKWASH HEX NUT	4
3	244112	CONVOLUTED TUBE	1
4	290168	HI-TEMP TC SENSOR	1
5	1900082	POLYSULFONE TC MOUNT	1
6	1900118	BELLOWS RESTRAINING RING	1
7	1900132	370 TC HEATER PLATE	1
8	1900327	TC STOP RING	1
9	1900326-31-1	TC ADAPTER RING	1

BILL OF MATERIALS

ITEM NO.	PART NO.	PART DESCRIPTION	QTY
1	22015	#8-32 X 3/4 SS PHP SCREW	4
2	23002	#8-32 ZP LKWASH HEX NUT	4
3	24030	#8 X 1/2" TEKS SCREW	2
4	30088	7/8" SNAP BUSHING	1
5	103034	GASKET	1
6	231204	IR SENSOR	1
7	231205	IR SENSOR MOUNT	1
8	244112	CONVOLUTED TUBE	1
9	1900340	IR STOP 370	1
10	1900325-31-1	IR ADAPTER RING	1

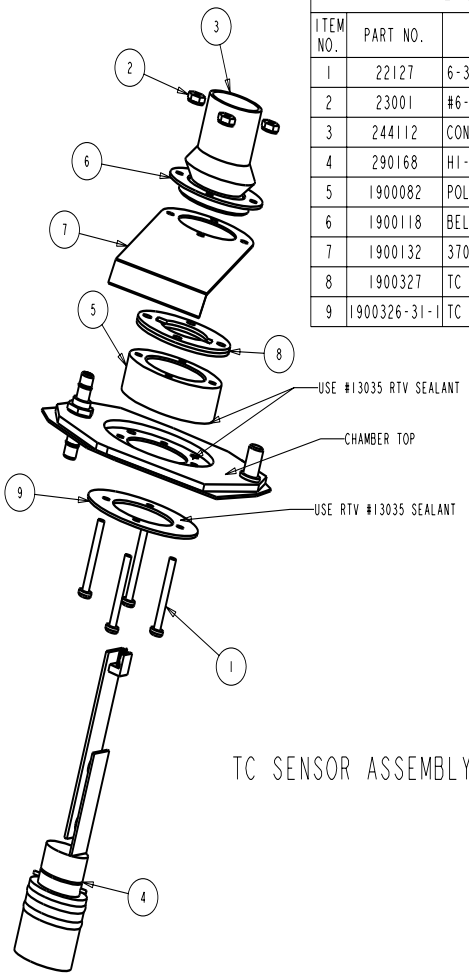

TC SENSOR ASSEMBLY

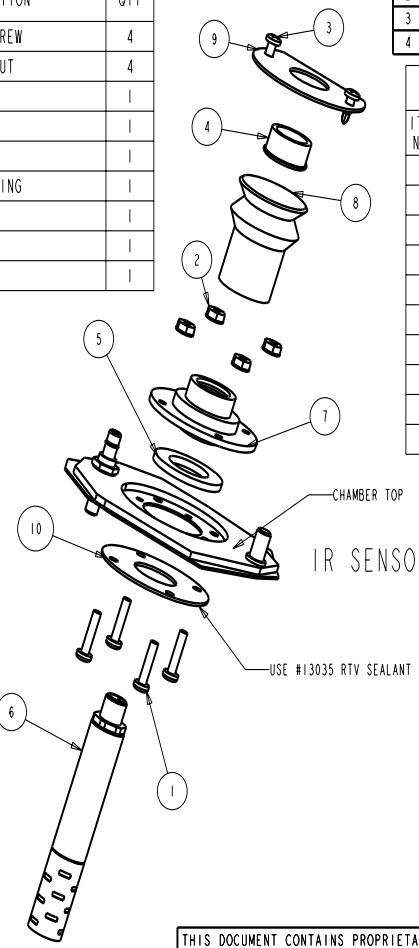

IR SENSOR ASSEMBLY

1. COMMONTO 3598,3540,3541,3542,3543

THIS DOCUMENT CONTAINS PROPRIETARY INFORMATION AND SUCH INFORMATION IS NOT TO BE DISCLOSED TO OTHERS FOR ANY PURPOSE NOR USED FOR MANUFACTURING PURPOSE WITHOUT WRITTEN PERMISSION FROM THERMO FISHER SCIENTIFIC

ThermoFisher SCIENTIFIC
BOX 649, MARIETTA, OHIO 45750

MODEL/PART NAME: 370 SERIES INCUBATOR
DWG TITLE: CO2 SENSORS
DWN: DALE | CAD: DCB | APPD: LDN | DATE: 3/27/01 | SCALE: 0.500
MATERIAL: -
PAINT: N/A
TOLERANCE UNLESS OTHERWISE SPECIFIED
ANGLES: DECIMAL: .XX=± .XXX=±
DRAWING NUMBER 370-200-8
SIZE B

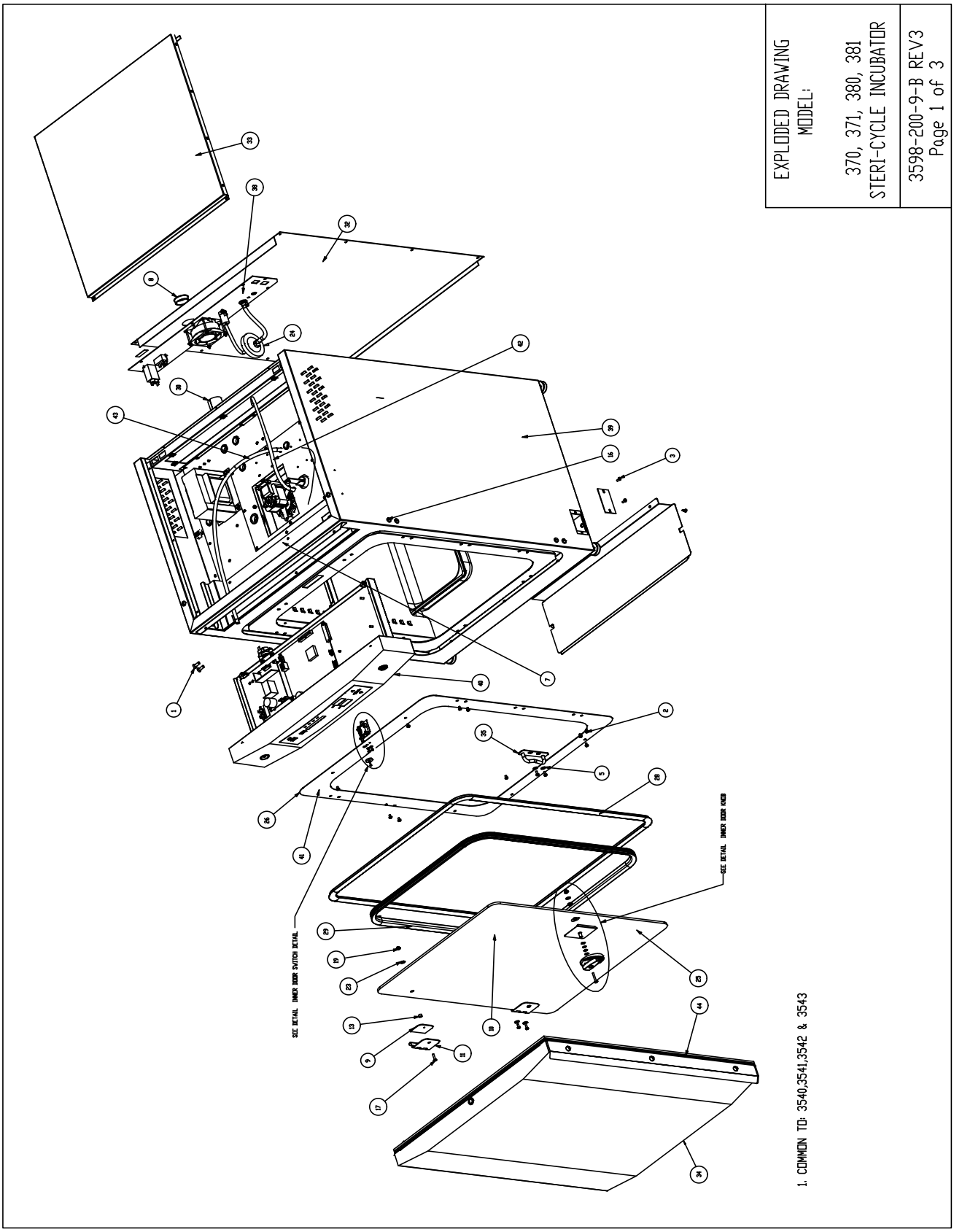
EXPLODED DRAWING
MODEL:
370, 371, 380, 381
STERI-CYCLE INCUBATOR
3598-200-9-B REV3
Page 1 of 3
SEE DETAIL INNER DOOR SWITCH DETAIL
SEE DETAIL INNER DOOR KNOB
1. COMMON TO: 3540,3541,3542 & 3543

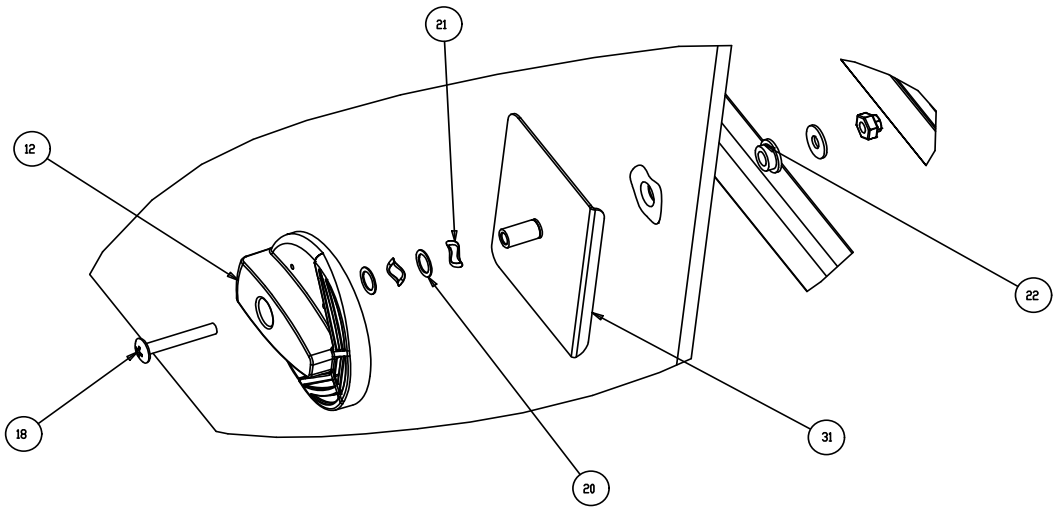

DETAIL INNER DOOR KNOB

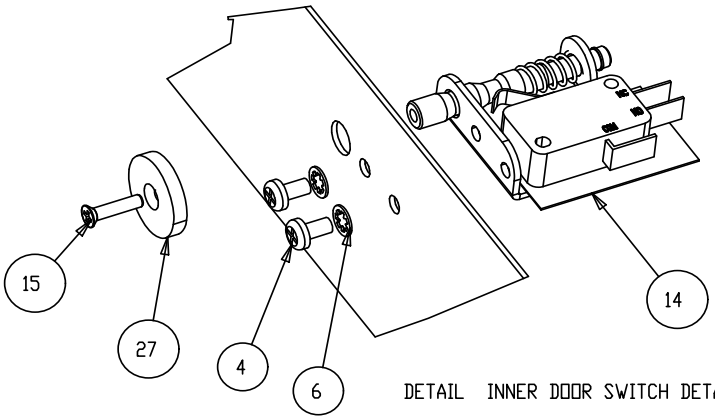

DETAIL INNER DOOR SWITCH DETAIL

EXPLODED DRAWING
MODEL:

370, 371, 380, 381
STERI-CYCLE INCUBATOR

3598-200-9-B REV3
Page 2 of 3

BILL OF MATERIALS			
ITEM NO.	PART NO.	PART DESCRIPTION	QTY
1	20058	#1/4-20 X 3/4 SS FHP UC SCREW	4
2	22051	#8-32 X 1/4 SS PHP SCREW	10
3	22052	#8-32 X 3/8 SS PHP SCREW	5
4	22115	#6-32 X 1/4 SS PHP SCREW	2
5	23021	#8 SS FLAT WASHER	7
6	23030	#6 INTERNAL LOCK WASHER SS	2
7	23051	#8-32 S.S. WING NUT	4
8	30077	1-1/2" SNAP BUSHING	1
9	103115	INNER DOOR HINGE GASKET	2
10	105066	20.5 X 26.875 X .23 THK. TEMPER GLASS	1
11	116109	SS HINGE .693 HINGE HEIGHT	2
12	120072	ULTRA HIGH TEMP KNOB DETAIL	1
13	125022	TEFLON SPACER 11/32" O.D.	2
14	360239	INTERLOCK SWITCH	1
15	490026	4-40 x 1/2 FHP SS SCREW	1
16	550050	1/4-20 X 1/2" NYLON BH SCREW	6
17	550054	#8-32 X 3/4 TRUSS HD PHILLIPS SCREW	2
18	550055	#8-32 X 1-1/8 TRUSS HD PHILLIPS SCREW	1
19	610079	8-32 SS 'FLEXLOC' LOCKING NUT	3
20	730056	.285 ID SS FLAT WASHER	3
21	730057	WAVE WASHER .288" ID X .407 OD	2
22	730073	TEFLON SHOULDER WASHER	1
23	730086	1/2 OD SILICONE SEAL WASHER #8	2
24	770001	DISPOSIBLE HEPIA FILTER 1/4	1
25	1900304	INNER DOOR ASSEMBLY	1
26	1900318	INTERIOR FRONT TRIM	1
27	1900338	3/4 O.D INNER DR SWITCH STRIKE	1
28	103102_370	HEATBREAK GASKET SILICONE	1
29	103108_370	INNER DOOR SILICONE GASKET	1
30	180115_6	PORT LINER, TEFLON STRIP 6"LONG	1
31	1900182-16-1	INNER GLASS DOOR KNOB PLATE W/HOLE MNT.	1
32	1900307-31-1	EXTERIOR BACK	1
33	1900308-16-1	TOP COVER ASSEMBLY	1
34	3582102-02-1	EXTERIOR DOOR ASSEMBLY	1
35	1900333-15-1	INNER DOOR STRIKE ASSEMBLY	1
36	1900422-31-1	370 MOTOR BOX SUPPORT	1
37	290184_370	TEMPERATURE SENSOR	1
38	370-200-5	370 BACK PANEL ASSEMBLY	1
39	3701000-01-1	EXTERIOR WRAP ASSEMBLY	1
40	3578-71-1	FRONT CONTROL PANEL ASSEMBLY	1
41	3705000-01-1	INNER FACE PLATE ASSY	1
42	INJCT_TUBE_1	CO2 INJECT TUBE VINYL #244020 20"	1
43	SMPL_TUBE_370	SAMPLE TUBE SILICONE #244020 30"	1
44	1900290-31-1	EXTERIOR DOOR HANDLE	1

EXPLODED DRAWING
MODEL:

370, 371, 380, 381
STERI-CYCLE INCUBATOR

3598-200-9-B REV3
Page 3 of 3

DWG. NUMBER: 3705000-01-1-B

REV	ECN NO.	DATE	BY	CAD	APPD	DESCRIPTION OF REVISION
0	N/A	4/12/01	DCB	DCB	DNF	RELEASED FOR PRODUCTION
1	IN-3009	12-13-01	WCW	KDG	LDN	ADDED LOCTITE TO 490026 #4-40 SCREW
2	IN-3800	03-25-08	JNL	SAG	LDN	DEL. (2) 23005 ADDED (1) 515125
3	IN-3923	04-03-09	JNL	SAG	LDN	DEL 515125, ADDED .25 TO 360239
4	ECNM-001383	03-02-21	TF1	TF1	BT	360280 WAS 360239

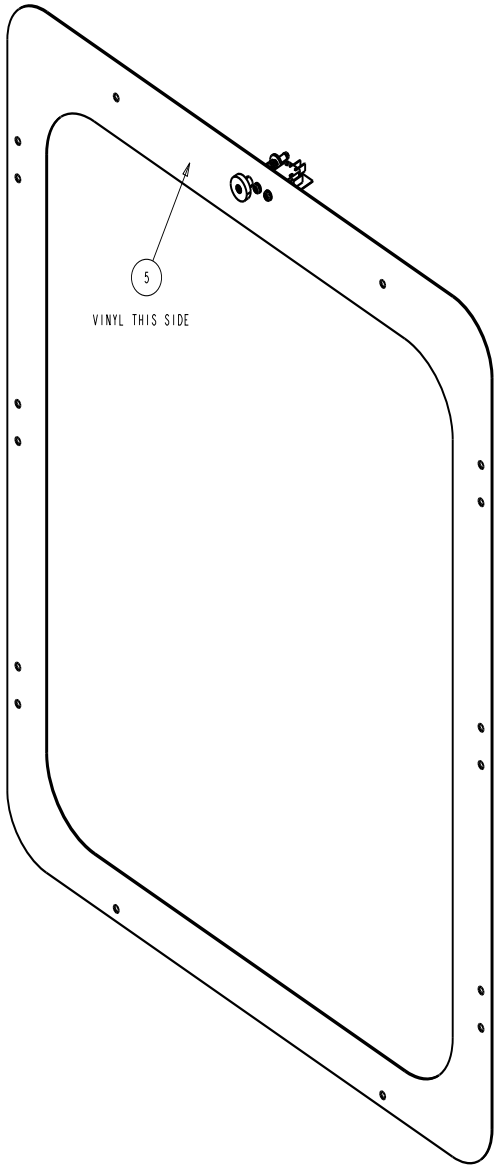

BILL OF MATERIALS

ITEM NO.	PART NO.	PART DESCRIPTION	QTY
1	22115	#6-32 X 1/4 SS PHP SCREW	2
2	23030	#6 INTERNAL LOCK WASHER SS	2
3	360280	INTERLOCK SWITCH	1
4	490026	4-40 x 1/2 FHP SS SCREW	1
5	1900318	INTERIOR FRONT TRIM	1
6	1900338	INNER DOOR ACTUATOR FOR 370 INC	1

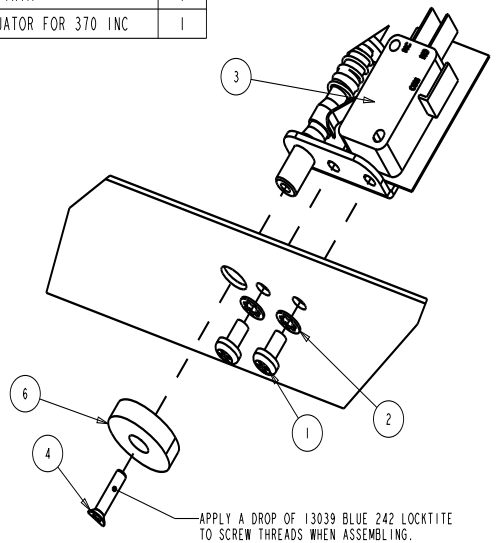

APPLY A DROP OF 13039 BLUE 242 LOCKTITE TO SCREW THREADS WHEN ASSEMBLING.
SCALE 1.000

THIS DOCUMENT CONTAINS PROPRIETARY INFORMATION AND SUCH INFORMATION IS NOT TO BE DISCLOSED TO OTHERS FOR ANY PURPOSE NOR USED FOR MANUFACTURING PURPOSE WITHOUT WRITTEN PERMISSION FROM THERMO FISHER SCIENTIFIC

MODEL/PART NAME: 370 SERIES INCUBATOR

DWG TITLE: INNER FACE PLATE ASSY

DWN: DALE	CAD: DCB	APPD: DNF	DATE: 4/11/01	SCALE: 0.312

MATERIAL: -

PAINT: N/A

TOLERANCE UNLESS OTHERWISE SPECIFIED
ANGLES: DECIMAL: .XX=±
.XXX=±

DRAWING NUMBER 3705000-01-1

SIZE B

ThermoFisher SCIENTIFIC
BOX 649, MARIETTA, OHIO 45750

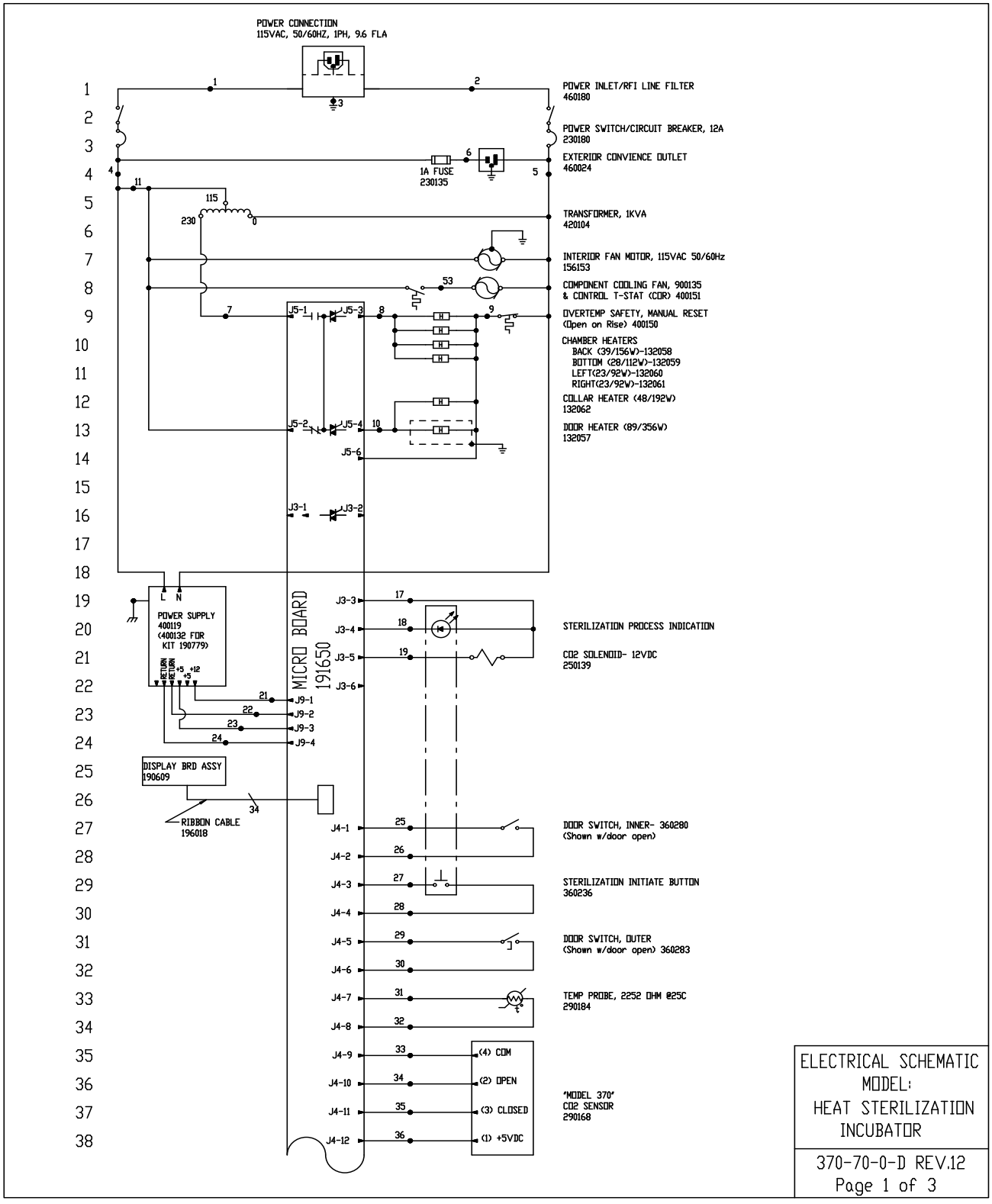

ELECTRICAL SCHEMATIC
MODEL:
HEAT STERILIZATION
INCUBATOR

370-70-0-D REV.12
Page 1 of 3

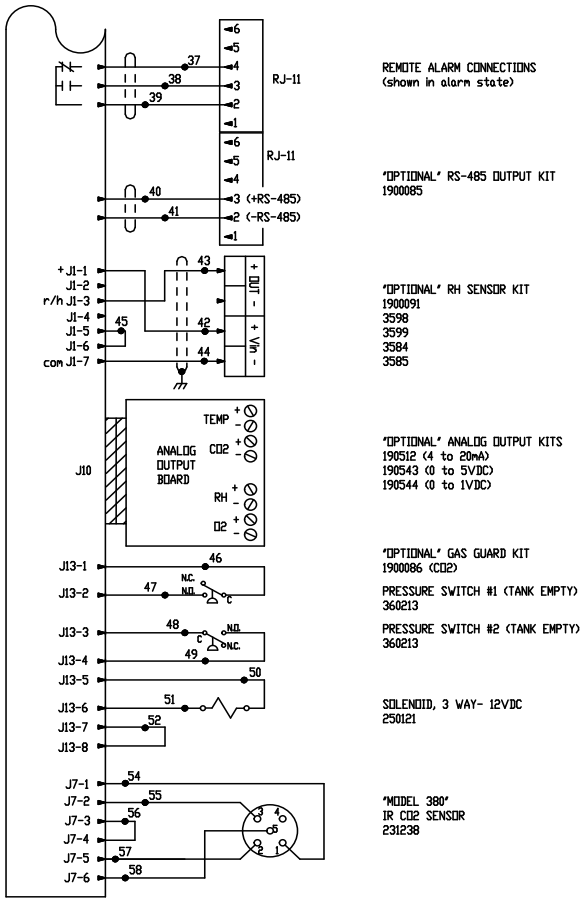

ELECTRICAL SCHEMATIC MODEL: HEAT STERILIZATION INCUBATOR
370-70-0-D REV.12 Page 2 of 3

77
78
79
80
81
82
83
84
85
86
87
88
89
90
91
92
93
94
95
96
97
98
99
100
101
102
103
104
105
106
107

WIRE REFERENCE CHART								
NO.	GA.	COLOR	NO.	GA.	COLOR	NO.	GA.	COLOR
1	16	BROWN	21	18	RED	42	22/3	BLACK
2	16	BLUE	22	18	GREEN	43	22/3	RED
3	16	GRN/YEL	23	18	ORANGE	44	22/3	WHT OR GRN
4	16	BLACK	24	18	GREEN			
5	16	WHITE	25	22	BLUE	45	22	BLACK
6	18	BLACK	26	22	BLUE	46	20	RED
7	16	YELLOW	27	22	BROWN	47	20	RED
8	18	ORANGE	28	22	BROWN	48	20	BLUE
9	18	RED	29	22	YELLOW	49	20	BLUE
10	18	BLUE	30	22	YELLOW	50	20	ORANGE
11	18	RED	31	22	RED	51	20	ORANGE
12	--	-----	32	22	RED	52	20	BLACK
13	--	-----	33	22	GREEN	53	18	BROWN
14	--	-----	34	22	GRAY	54	22/5	BROWN
15	--	-----	35	22	PURPLE	55	22/5	BLUE
16	--	-----	36	22	ORANGE	56	24	BLACK
17	18	ORANGE	37	22/3	BLACK	57	22/5	WHITE
18	18	BLACK	38	22/3	RED	58	22/5	GRAY OR GRN/YEL
19	18	YELLOW	39	22/3	WHITE			
20	--	-----	40	22/2	RED			
			41	22/2	BLACK			

MODEL	DESCRIPTION
370	STERI CYCLE T/C CO2 INCUBATOR
380	STERI CYCLE I/R CO2 INCUBATOR
3598	STERI CYCLE T/C CO2 INCUBATOR
3599	STERI CYCLE I/R CO2 INCUBATOR
3584	STERI CYCLE T/C CO2 INCUBATOR, RH DISPLAY
3585	STERI CYCLE I/R CO2 INCUBATOR, RH DISPLAY
3540	STERI CYCLE T/C CO2 INCUBATOR, 115 VOLT
3542	STERI CYCLE I/R CO2 INCUBATOR, 115 VOLT

ATTENTION
OBSERVE PRECAUTIONS
ELECTROSTATIC
SENSITIVE DEVICES

ELECTRICAL SCHEMATIC
MODEL:
HEAT STERILIZATION
INCUBATOR

370-70-0-D REV.12
Page 3 of 3

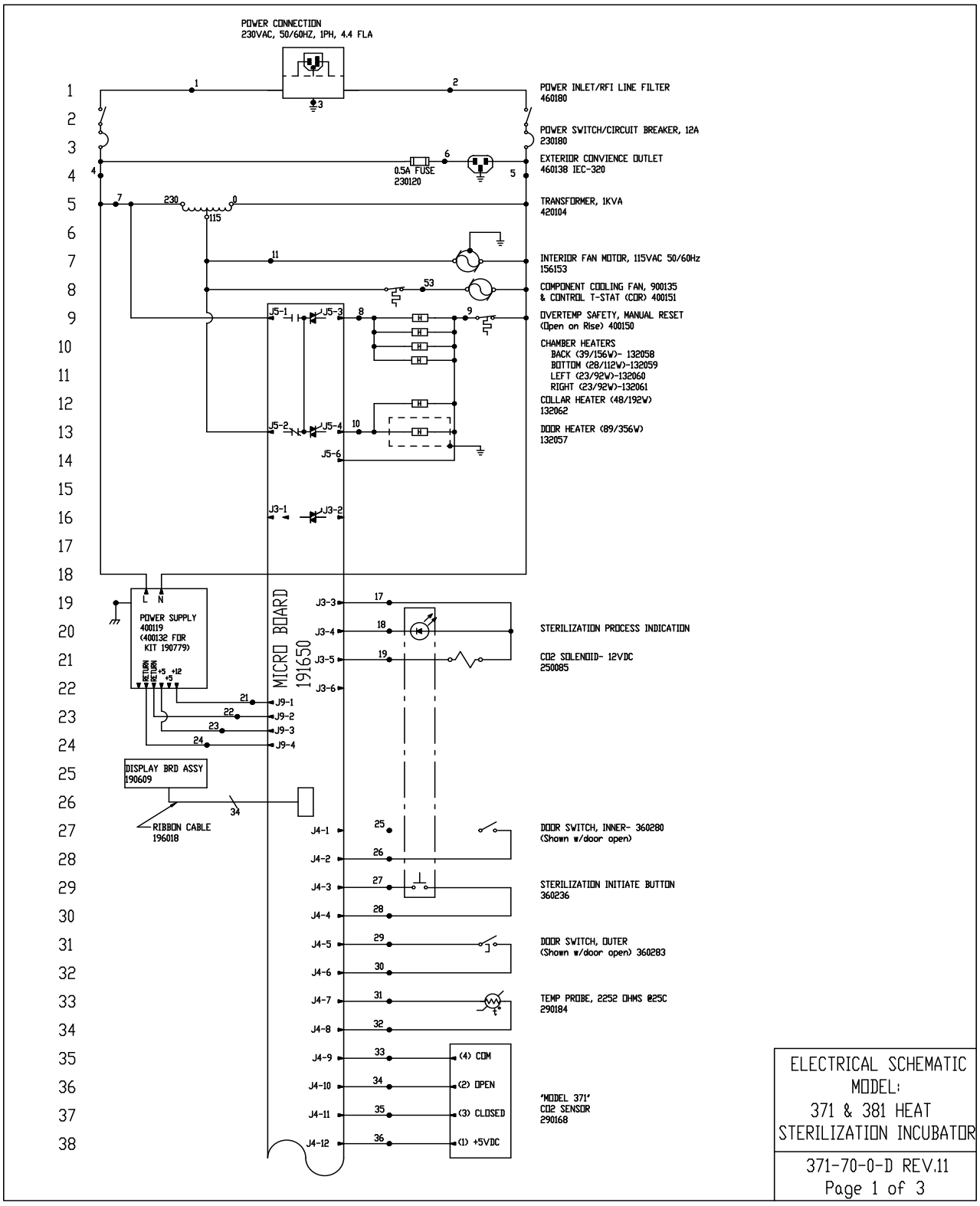
POWER CONNECTION
230VAC, 50/60HZ, 1PH, 4.4 FLA
POWER INLET/RFI LINE FILTER
460180
POWER SWITCH/CIRCUIT BREAKER, 12A
230180
EXTERIOR CONVIENCE OUTLET
460138 IEC-320
0.5A FUSE
230120
TRANSFORMER, 1KVA
420104
INTERIOR FAN MOTOR, 115VAC 50/60Hz
156153
COMPONENT COOLING FAN, 900135
& CONTROL T-STAT (CDR) 400151
OVERTEMP SAFETY, MANUAL RESET
(Open on Rise) 400150
CHAMBER HEATERS
BACK (39/156W)- 132058
BOTTOM (28/112W)-132059
LEFT (23/92W)-132060
RIGHT (23/92W)-132061
COLLAR HEATER (48/192W)
132062
DOOR HEATER (89/356W)
132057
MICRO BOARD
191650
POWER SUPPLY
400119
(400132 FOR
KIT 190779)
DISPLAY BRD ASSY
190609
RIBBON CABLE
196018
STERILIZATION PROCESS INDICATION
CO2 SOLENOID- 12VDC
250085
DOOR SWITCH, INNER- 360280
(Shown w/door open)
STERILIZATION INITIATE BUTTON
360236
DOOR SWITCH, OUTER
(Shown w/door open) 360283
TEMP PROBE, 2252 OHMS @25C
290184
MODEL 371
CO2 SENSOR
290168
(4) COM
(2) OPEN
(3) CLOSED
(1) +5VDC
ELECTRICAL SCHEMATIC
MODEL:
371 & 381 HEAT
STERILIZATION INCUBATOR
371-70-0-D REV.11
Page 1 of 3

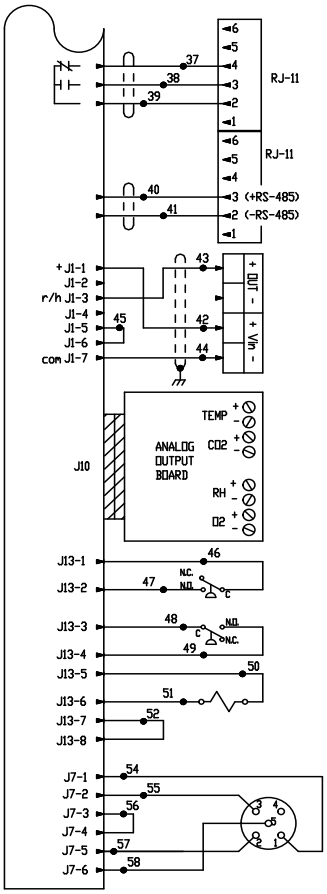

REMOTE ALARM CONNECTIONS
(shown in alarm state)

"OPTIONAL" RS-485 OUTPUT KIT
1900085

"OPTIONAL" RH SENSOR KIT
1900091
3598
3599
3584
3585

"OPTIONAL" ANALOG OUTPUT KITS
190512 (4 to 20mA)
190543 (0 to 5VDC)
190544 (0 to 1VDC)

"OPTIONAL" GAS GUARD KIT
1900086 (CO2)

PRESSURE SWITCH #1 (TANK EMPTY)
360213

PRESSURE SWITCH #2 (TANK EMPTY)
360213

SOLENOID, 3 WAY- 12VDC
250121

"MODEL 381"
IR CO2 SYSTEM
231238

ELECTRICAL SCHEMATIC MODEL: 371 & 381 HEAT STERILIZATION INCUBATOR
371-70-0-D REV.11 Page 2 of 3

77
78
79
80
81
82
83
84
85
86
87
88
89
90
91
92
93
94
95
96
97
98
99
100
101
102
103
104
105
106
107

WIRE REFERENCE CHART								
NO.	GA.	COLOR	NO.	GA.	COLOR	NO.	GA.	COLOR
1	16	BROWN	21	18	RED	42	22/3	BLACK
2	16	BLUE	22	18	GREEN	43	22/3	RED
3	16	GRN/YEL	23	18	ORANGE	44	22/3	WHT OR GRN
4	16	BLACK	24	18	GREEN	45	22	BLACK
5	16	WHITE	25	22	BLUE	46	20	RED
6	18	BLACK	26	22	BLUE	47	20	RED
7	16	YELLOW	27	22	BROWN	48	20	BLUE
8	18	ORANGE	28	22	BROWN	49	20	BLUE
9	18	RED	29	22	YELLOW	50	20	ORANGE
10	18	BLUE	30	22	YELLOW	51	20	ORANGE
11	18	RED	31	22	RED	52	20	BLACK
12	--	----	32	22	RED	53	18	BROWN
13	--	----	33	22	GREEN	54	24/4	BLACK
14	--	----	34	22	GRAY	55	24/4	WHITE
15	--	----	35	22	PURPLE	56	24	BLACK
16	--	----	36	22	ORANGE	57	24/4	RED
17	18	ORANGE	37	22/3	BLACK	58	24/4	GREEN
18	18	BLACK	38	22/3	RED	59		
19	18	YELLOW	39	22/3	WHITE	60		
20	--	----	40	22/2	RED			
			41	22/2	BLACK			

MODEL	DESCRIPTION
3541	STERI-CYCLE TC CO2 INC. - 230V
3543	STERI-CYCLE IR CO2 INC. - 230V
371	STERI-CYCLE T/C CO2 INC 230V
381	STERI-CYCLE IR CO2 INC 230V
371GP	STERI-CYCLE T/C CO2 INC 230V GENERAL PURPOSE
381GP	STERI-CYCLE IR CO2 INC 230V GENERAL PURPOSE

ATTENTION
OBSERVE PRECAUTIONS
ELECTROSTATIC
SENSITIVE DEVICES

ELECTRICAL SCHEMATIC
MODEL:
371 & 381 HEAT
STERILIZATION INCUBATOR

371-70-0-D REV.11
Page 3 of 3

THERMO FISHER SCIENTIFIC STANDARD PRODUCT WARRANTY

The Warranty Period starts two weeks from the date your equipment is shipped from our facility. This allows for shipping time so the warranty will go into effect at approximately the same time your equipment is delivered. The warranty protection extends to any subsequent owner during the first year warranty period.

During the first year, component parts proven to be non-conforming in materials or workmanship will be repaired or replaced at Thermo's expense, labor included. The Watlow EZ-ZONE PM controller is covered for one additional year for repair or replacement (parts only), provided the unit has not been misapplied. Installation and calibration are not covered by this warranty agreement. The Technical Services Department must be contacted for warranty determination and direction prior to performance of any repairs. Expendable items, glass, filters and gaskets are excluded from this warranty.

Replacement or repair of components parts or equipment under this warranty shall not extend the warranty to either the equipment or to the component part beyond the original warranty period. The Technical Services Department must give prior approval for return of any components or equipment. At Thermo's option, all non-conforming parts must be returned to Thermo Fisher Scientific postage paid and replacement parts are shipped FOB destination.

THIS WARRANTY IS EXCLUSIVE AND IN LIEU OF ALL OTHER WARRANTIES, WHETHER WRITTEN, ORAL OR IMPLIED. NO WARRANTIES OF MERCHANTABILITY OR FITNESS FOR A PARTICULAR PURPOSE SHALL APPLY. Thermo shall not be liable for any indirect or consequential damages including, without limitation, damages relating to lost profits or loss of products.

Your local Thermo Sales Office is ready to help with comprehensive site preparation information before your equipment arrives. Printed instruction manuals carefully detail equipment installation, operation and preventive maintenance.

If equipment service is required, please call your Technical Services Department at 1-800-438-4851 (USA and Canada) or 1-740-373-4763. We're ready to answer your questions on equipment warranty, operation, maintenance, service and special application. Outside the USA, contact your local distributor for warranty information.

Rev. 5 8/13

ISO 9001 REGISTERED

THERMO FISHER SCIENTIFIC INTERNATIONAL DEALER WARRANTY

The Warranty Period starts two months from the date your equipment is shipped from our facility. This allows for shipping time so the warranty will go into effect at approximately the same time your equipment is delivered. The warranty protection extends to any subsequent owner during the first year warranty period. Dealers who stock our equipment are allowed an additional six months for delivery and installation, provided the warranty card is completed and returned to the Technical Services Department.

During the first year, component parts proven to be non-conforming in materials or workmanship will be repaired or replaced at Thermo's expense, labor excluded. The Watlow EZ-ZONE PM controller is covered for one additional year for repair or replacement (parts only), provided the unit has not been misapplied. Installation and calibration are not covered by this warranty agreement. The Technical Services Department must be contacted for warranty determination and direction prior to performance of any repairs. Expendable items, glass, filters, reagents, tubing, and gaskets are excluded from this warranty.

Replacement or repair of components parts or equipment under this warranty shall not extend the warranty to either the equipment or to the component part beyond the original warranty period. The Technical Services Department must give prior approval for return of any components or equipment. At Thermo's option, all non-conforming parts must be returned to Thermo postage paid and replacement parts are shipped FOB destination.

THIS WARRANTY IS EXCLUSIVE AND IN LIEU OF ALL OTHER WARRANTIES, WHETHER WRITTEN, ORAL OR IMPLIED. NO WARRANTIES OF MERCHANTABILITY OR FITNESS FOR A PARTICULAR PURPOSE SHALL APPLY. Thermo shall not be liable for any indirect or consequential damages including, without limitation, damages relating to lost profits or loss of products.

Your local Thermo Sales Office is ready to help with comprehensive site preparation information before your equipment arrives. Printed instruction manuals carefully detail equipment installation, operation and preventive maintenance.

Contact your local distributor for warranty information. We're ready to answer your questions on equipment warranty, operation, maintenance, service and special application.

Rev. 5 8/13

ISO 9001 REGISTERED

thermoscientific.com

© 2023 Thermo Fisher Scientific Inc. All rights reserved. All trademarks are the property of Thermo Fisher Scientific and its subsidiaries. Specifications, terms and pricing are subject to change. Not all products are available in all countries. Please consult your local sales representative for details.

Thermo Fisher Scientific (Asheville) LLC
401 Millcreek Road
Marietta, Ohio 45750
United States

Thermo SCIENTIFIC

A Thermo Fisher Scientific Brand